CSWA Student Guide

By Mouiz Majid and Mohammed Sidahmed

Summer 2025

John M. Thompson Centre for Engineering Leadership and Innovation

A beginner's guide to passing the SolidWorks Certified Associate Exam

Created under the supervision of Minha R. Ha for the Integrated Engineering Program

Western University, 2025

Table of Contents

1. What is SolidWorks?
2. Learn about the structure of the CSWA exam, including estimated study/practice time for each section
3. Launch SolidWorks using AppsAnywhere (Western Engineering)
4. Familiarize yourself with the interface while learning foundational skills and features to be used in almost every project made in the program
    a. Initialize a working environment in SolidWorks and introduce yourself to the software's interface
    b. SolidWorks Lessons: videos and descriptions that will teach you skills needed for the exam
        i. Video 1: Tour of the interface + Creating your first part
            - Video 1B: Basics of the Line Tool
        ii. Video 2: Sketching and Boss-Extrude
        iii. Video 3: Cut-Extrude
            - Video 3B: Convert Entities
        iv. Video 4: Mirror and Fillet
        v. Video 5: Assembly Modeling
        vi. Video 6: Patterns
        vii. Video 7-9: Advanced Boss and Cut features
        viii. Video 10: Drawings
5. Work through the questions in the CSWA practice exam, following along tutorials
    a. Prerequisite Knowledge
            - Video A: Global Variables
    b. Download the Practice Exam
    c. Question Video Tutorials
        i. Question 1 Video tutorial – Drawing Views 1
        ii. Question 2 Video tutorial – Drawing Views 2
        iii. Question 3 Video tutorial – Part: 2D sketching
        iv. Question 4 Video tutorial – Part: Reevaluating Parts
        v. Question 5 Video tutorial – Part: Cut-Extrude
        vi. Question 6 Video tutorial – Part: Offset & Features
        vii. Question 7 Video tutorial – Assembly: Mates
        viii. Question 8 Video tutorial – Assembly: Reevaluating Assemblies

What is SolidWorks?

SolidWorks is a powerful, industry-standard 3D computer-aided design (CAD) software used by engineers, designers, and manufacturers to create precise digital models of physical products. It allows users to design/visualize parts, assemblies, and technical drawings. This helps save costs because products can be tested in the software, which eliminates the need for manufacturing prototypes to test in real life.

SolidWorks is widely used in fields such as mechanical engineering, product design, manufacturing, and aerospace due to its user-friendly interface, parametric design capabilities, and simulation tools.

(While the software is excellent for designing and simulating the behavior of solid components, it has limitations when it comes to simulating fluid flow in complex systems. More advanced CFD tasks are often done with tools like ANSYS Fluent and OpenFOAM, which both use the Finite Volume Method (FVM). Fluent is a commercial, user-friendly software commonly used in industry. It features an integrated GUI that simplifies the entire process, from meshing to visualization, making it ideal for quick, professional results. OpenFOAM is open-source and highly customizable, often preferred in research. It offers more control over simulation setups but requires command-line knowledge and manual configuration. Results are usually visualized with ParaView. In short: Fluent is easier to use but paid; OpenFOAM is free and flexible but has a steeper learning curve. - From Alireza Mohseni, PHD Candidate in Chemical Engineering at Western University)

What can I do in SolidWorks?

- **Part Modeling**: Create detailed 3D models using 2D sketches and features like extrude, cut, revolve, and fillet.
- **Assemblies**: Combine multiple parts with realistic mechanical relationships (mates) to simulate how components fit and move together.
- **Drawings**: Produce 2D technical drawings with dimensions and annotations for manufacturing or documentation.
- **Simulation**: Test performance with stress analysis, motion studies, and flow simulations (in advanced versions).
- **Parametric Design**: Quickly update models by changing dimensions and constraints.

This content in this section was adapted from the SolidWorks website.
https://www.solidworks.com/product/solidworks-3d-cad#scroll--3160

The CSWA Exam

The Certified SolidWorks Associate Exam is one of many exams offered by SolidWorks that users take to showcase their skill in the program. This exam is the entry-level and easiest difficulty of all of the exams. Upon completion, you are awarded the certificate of a SolidWorks Associate, an achievement that exhibits your capability of using the software.

Here is a breakdown of the Content of the CSWA exam:

- There are a total of 14 questions in the CSWA exam.
- You are given a time limit of 3 hours/180 minutes to complete the exam.
- To pass the exam and achieve the certificate, you must score a minimum of 165 out of 240 marks.

SolidWorks allows you to work on three different file types within the program. These are **Part**, **Assembly**, and **Drawing**. The exam follows this structure, and is divided into three main sections:

1. Drawing Competencies - 15 points

This section covers the Drawings file type in the SolidWorks program. There are 3 questions worth 5 points each. These questions test your understanding of:

- Creating and modeling drawing views can be done using tools such as crop views broken out section and many others.
- Creating a 2d representation of a 3d model and be able to read it and understand it.

2. Part sketching and modeling – 105 points

This section covers the Part file type and has 3 divisions, each with progressing difficulty. The first division features basic part creation and modification and includes 2 questions worth 15 points each. The second division features intermediate part creation and modification, which also includes 2 questions worth 15 points each. The third and last division features advanced part creation and modification and includes 3 questions worth 15 points each. These questions test your understanding of:

- Sketch entities - lines, rectangles, circles, arcs, ellipses, centerlines
- Boss and cut features - extrudes, revolves, sweeps, lofts
- Modification of key dimensions
- Sketch tools - offset, convert, trim

3. Assembly Modeling - 120 points

This section covers the Assembly file type. It includes 4 questions worth 30 points each. These questions test your understanding of:

- Placing Parts appropriately with relevant relations to reference geometry
- Applying M**ates** to define relationships between parts
- Modifying key parameters in an Assembly

Launching SolidWorks

Now that you know what is expected to be on the CSWA exam, you can dive into getting started with SolidWorks and working to become a capable user.

As an engineering student at Western University, you are given free access to SolidWorks. To access the software, you will first need to log in with your UWO account and download AppsAnywhere here: https://appsanywhere.eng.uwo.ca/

After launching AppsAnywhere, navigate to the search bar on the website and search for SolidWorks. Locate SolidWorks 2024 and **launch** the program. Do not hit the download button. ASK THEM

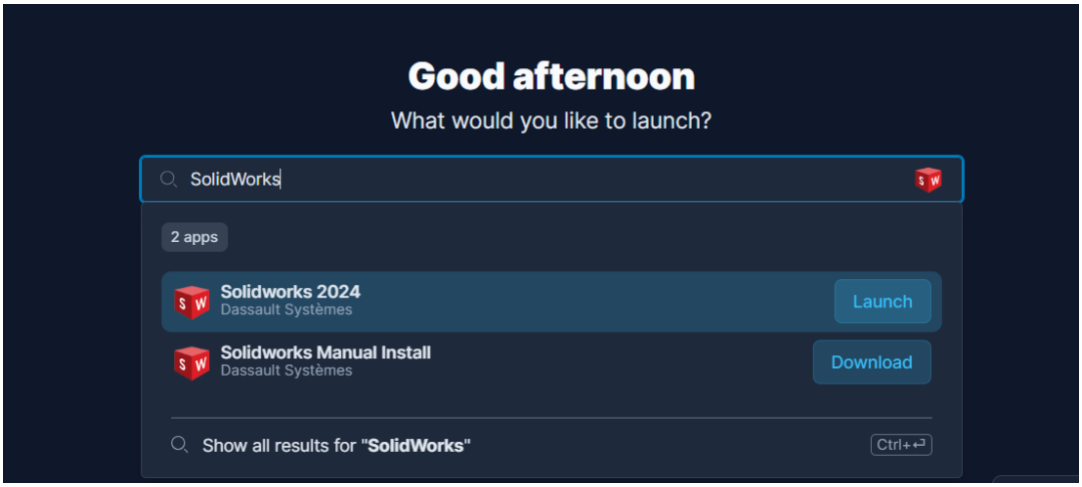

After launching, the program will run on your device. If it does not launch, do the following:

Trouble Shooting 1:

When you download AppsAnywhere, your device will also recieve the Cloudpaging Player program. This program allows you to monitor the apps that are running on your computer via AppsAnywhere.

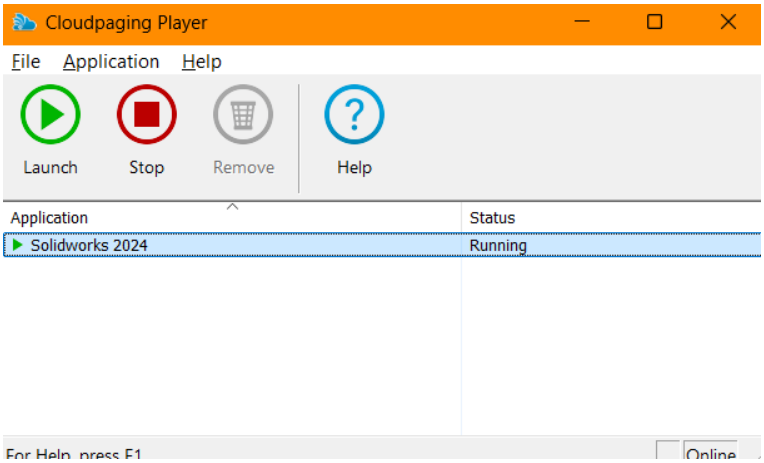

If SolidWorks does not launch, select SolidWorks 2024 in the application section of the player. Hit Stop. Hit yes when asked for a confirmation to stop the program. Then select the green Launch button. Now wait for SolidWorks to launch again (it may take a minute).

Learning the Program

This section of the handbook is split into two sections, the first for setting up the working environment and the second features the lessons.

a. Initialize your Work Environment

Once SolidWorks has opened, click on file on the top left corner. Select new, then select part, then OK.

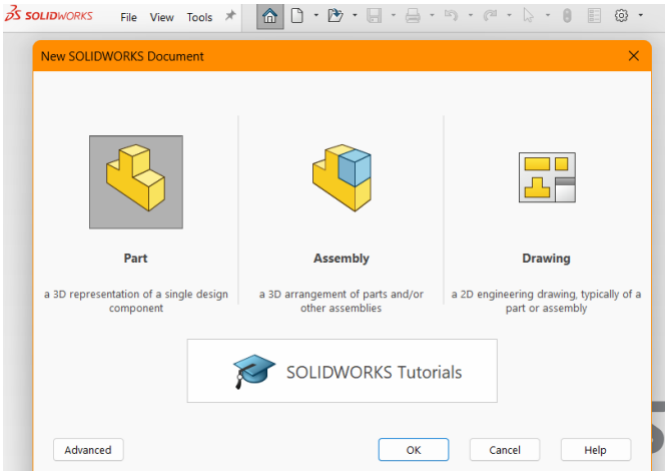

Before you can create 3D models, you must first create a 2D sketch. To do this, select a plane to sketch on (right click on any of the planes, and hit sketch).

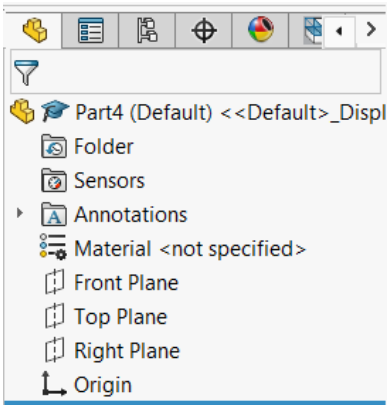

Congratulations, you have successfully set up SolidWorks and can now create models of all kinds of technical artefacts in everyday life.

Below is a quick overview of the tools and elements of the interface (Fig. 1). To get started, view the most used sections of the interface:

- The View Toolbar to switch between top view, front view, and isometric view. This allows you to change your perspectives on a part, making editing easier
- The FeatureManager, where you will be frequently selecting features and changing properties of the parts and their environments.
- The CommandManager, where your main drawing tools will be found.

These parts of the interface will be interacted with the most when you sketch, model, and assemble in the program.

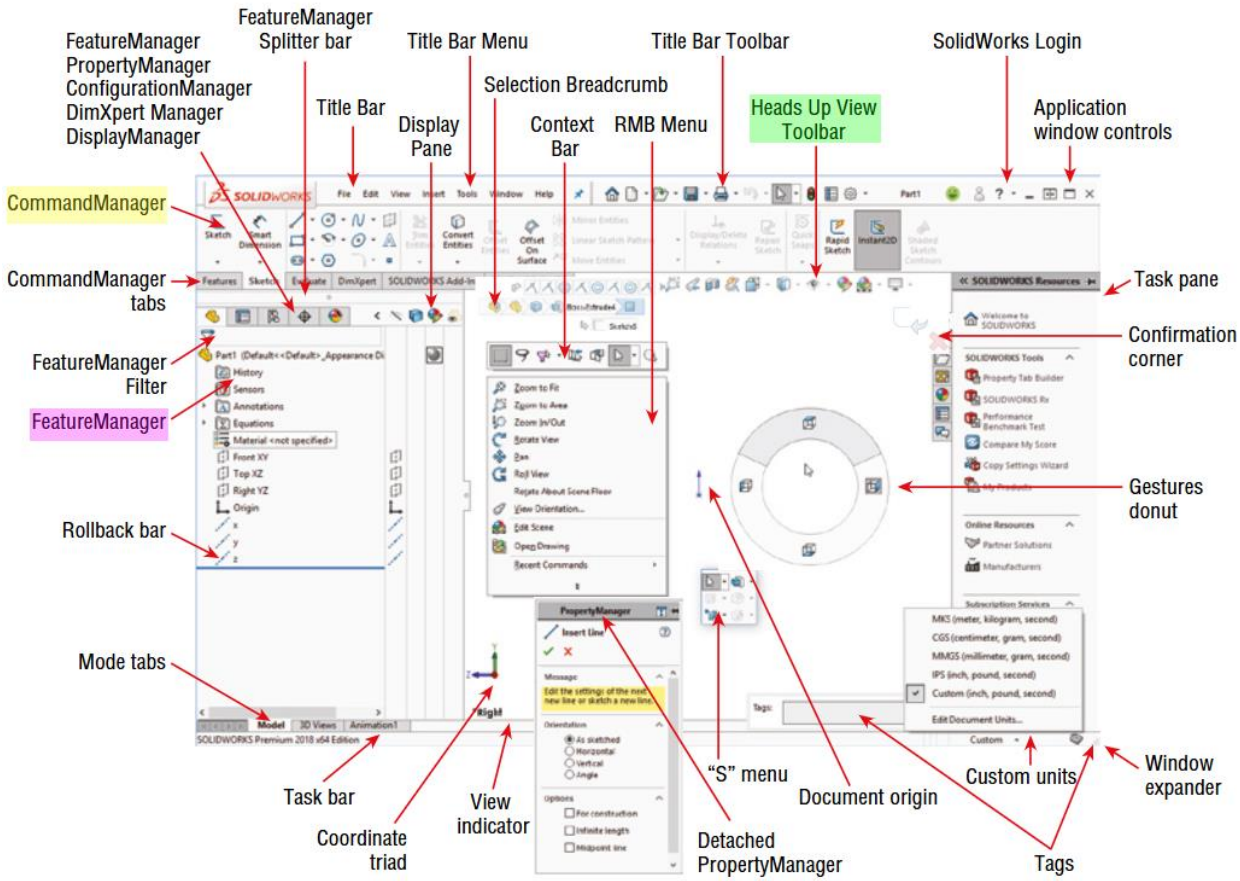

Figure 1. SolidWorks Interface (Lombard, 2018)

The image above may be hard for you to interpret all at once, especially as a beginner. But don't worry. You do not need to know everything all at once, instead, a much more appropriate method for learning is creating sketches and learning more elements as you go through using them. Having said that, let's start with learning **creation** in SolidWorks.

b. Lessons for learning the basics of SolidWorks

The SolidWorks Corporation has uploaded many useful resources online regarding the usage of the program, including written tutorials and video guides. In this document, we will be leveraging their playlist: A Beginners Guide to SolidWorks.

https://youtube.com/playlist?list=PLiKqXuECiKNLzF6aDC3z-H1BZ94ITZIQk&si=HL9GzkprjyxwGX65

This playlist will teach fundamentals and will lead by example. No previous SolidWorks experience will be necessary. It is recommended that you have the SolidWorks program open so that you can easily follow along and learn the concepts more effectively. Within the next few pages, the videos will be posted, and descriptions and timestamps will be written to explain and summarize lessons. Please read these descriptions in the below lessons as they will add context and additional information regarding tools and features that were used in the video. Also note that the playlist does not cover Drawings in SolidWorks. For this, you are advised to watch Video 10, which covers Drawings but is made by a different creator. Like previous videos, descriptions will be added to the Drawings video as well.

Video 1: Creating your first part

https://www.youtube.com/watch?v=qjtYqxNpj50&ab_channel=SOLIDWORKS

This video shows the basics of using SolidWorks, sketching a 2D part, and giving it 3D features.

At the time stamp 0:25, the creator shows how to make a file for a part. The segment from 0:25 to 1:08 may be skipped as we already covered this topic earlier in this document.

At 1:08, the creator tours the interface of SolidWorks. In the chapter of this document above this section, we briefly introduced the programs interface. If you want a quick summary of the interface beyond the diagram posted above, watch this part of the video.

You are encouraged to review the video but not to get stuck on the interface. The interface, tools, and features will be learned efficiently as you use them. If you would like to learn more about the interface, visit chapter 2 of the Mastering SolidWorks textbook which covers the software's environment in greater detail. It can be accessed here: https://onlinelibrary.wiley.com/doi/book/10.1002/9781119516743.

At 1:55, the creator creates a circle with the **Circle** command under the **Sketch** tab. Using the tools within **Sketch** tab, such as the **Rectangle** or **Circle**, you can create the foundations of 3D parts.

At 3:20, the creator gives dimensions to the circle using **Smart Dimension** (immediately next to the **Shape** commands). **Smart Dimension** is a very powerful tool used for assigning accurate measurements to parts so they can be created in real life.

At 5:10, the creator gives the circle a 3D aspect and turns the sketch into a cylinder. He does this by using the **Boss-Extrude** command within **Features** tab. The creator did not cover all the features of the command, so I will mention them here.

Click on a line or drawn plane, then select **Boss-Extrude**. This menu will appear on the **FeatureManager**.	From the dropdown menu (first showing as "Blind"):
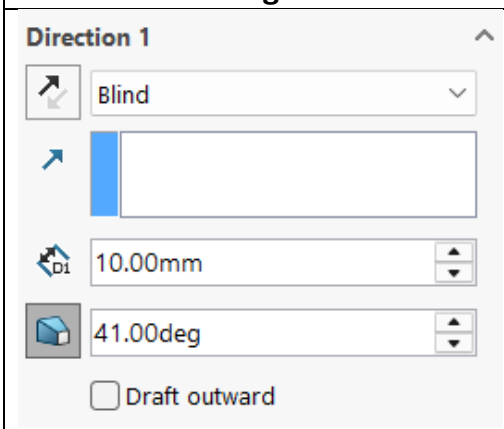 **Image A**	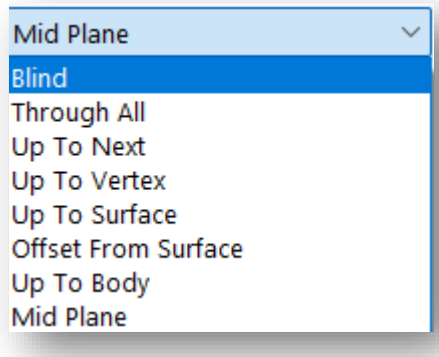 **Image B**

Images created by Mouiz Majid

Pause the video and take a moment to try all the **Boss-Extrude** options. Note the differences (Table 1):

Table 1. Extrude Boss Options

Option	What does it do?	Usage
Blind	Extrudes the sketch in one direction to a specific depth	Use when you know the exact measurement
Through All	Extruded the sketch until it passes everything in the model	For making a 3D shape inside a closed structure
Up To Next	Extrudes until the next face of the model	Like Through All, use when you want a smaller extrude
Up To Vertex	Extrudes to a selected point/vertex in the model	Used for precision extrudes
Up To Surface	Extrudes until it hits a selected surface, which could be not flat	For making extrudes fit to curved and uneven faces
Offset From Surface	Same as up to surface but you can specify a distance to stop before the surface is reached	When you need a gap between faces
Up To Body	Extrudes until hits a body	If using multiple solids in one part file
Mid Plane	Extrudes equally on both sides of the sketch plane	You want a 3D part to be centered around a plane

Another feature visible in Image A is the **Angled Extrude feature**. The user can select an angle in degrees and the extrude will form at an angle instead of with straight(perpendicular) edges. Below is an example of an extruded **Rectangle**. One with an angle of 0 degrees (left) and one with 20 degrees (right). Try it out yourself by entering different angle values in the appropriate field (you can enter just the numeric value).

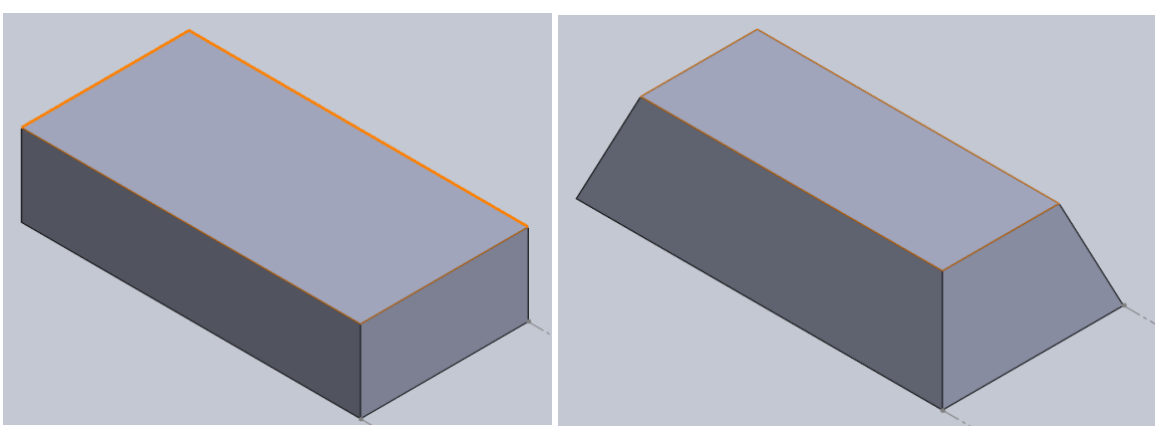

Images created by Mouiz Majid

Now, return to the video. At 5:37, the creator explains how to change the view of the program environment. Locate the **Heads-Up View Toolbar** (see figure 1) and select the screen icon (**View Settings)** on the right. Play around with the options under the menu and choose the ones that you prefer. Then you are shown how to change and rotate the view of your sketch/model.

- Hold the middle mouse button to rotate the view.
- Use the scroll wheel to zoom in and out.
- Hold the middle mouse button and the control key together to pan the view.
- Pressing F will show the entire model in your view.
- Pressing the space bar will allow you to select from many different views.

A useful feature for changing the view of your model is the **View Orientation Tool**. On the **Heads-Up View Toolbar**, locate the empty cube icon. Hover over it and select a view that you are comfortable with. This feature is useful for switching in between different views without trying to maneuver the screen with the just the mouse.

At 6:32, the creator discusses saving the part to 3D experience platform. This information is not necessary to learn for the CSWA exam, so feel free to skip this part.

Make sure you save this part file to your computer by going to **File**, then **Save As**. You have now learned some basic tools in SolidWorks. These features will be used every time you create something in the program. If you are confused on some of the topics mentioned, do not worry. SolidWorks is best learnt through practice, and since these tools are fundamental to the software, you will be comfortable with using them through further progression of this guide.

Before we progress to the next video in the playlist, we will cover a different SolidWorks video that will teach us more about the **Line** command.

Video 1B: Basics of the Line command

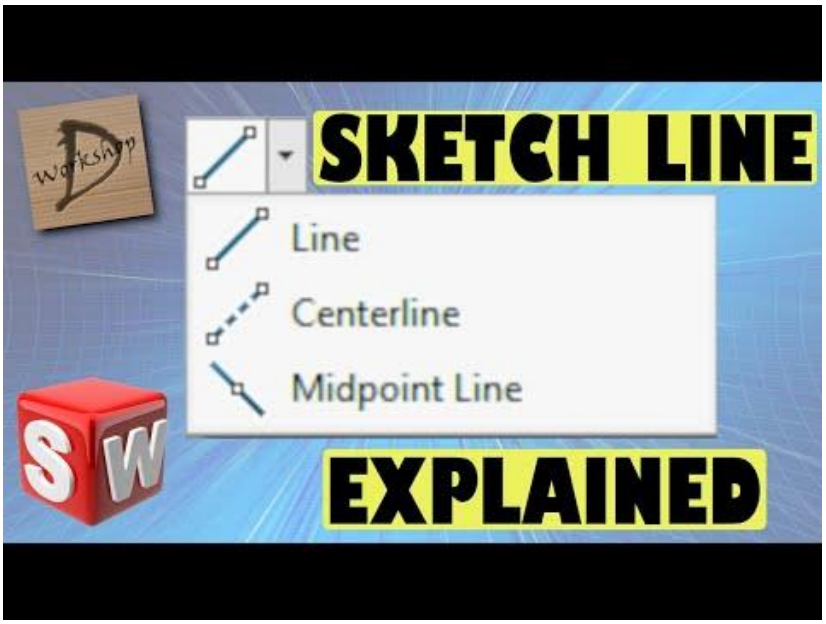

https://www.youtube.com/watch?v=4AT2_h7cqso&ab_channel=DWorkshop

The CSWA will have sections where you must sketch shapes and give them 3D features. These sketches will use the **Line** command very frequently; therefore, it is **crucial** to master it. In the CSWA practice exam, in the first question covering parts/the third question overall, the answer requires sketching an arc with the **Line** command. This feature will be covered in this video, please watch it.

At 0:25, the creator explains the different types of lines that can be made with this command.

At 0:43, the creator shows how you can make a straight line or a curved line/arc as the second line that connects to the first. You must know how to make an arc using this method for the CSWA exam. You can give an arc dimension with **Smart Dimension** by selecting it and specifying a radius.

At 1:18, the creator covers the rest of the possible options for the **Line** command.

You have now learned the knowledge of the **Line** command needed for the CSWA exam. We may now move on to the next video of the playlist.

Video 2: Sketching and extruding a part

https://www.youtube.com/watch?v=W-7UGc8uDTc&ab_channel=SOLIDWORKS

In this video, we will be creating a real-world part that will later be used in an assembly. We will use the lessons learned in the first video to make a 2D sketch, then make it into a 3D model.

At 0:42, the creator starts sketching the jaws of the nose pliers. When using SolidWorks, a user may notice how there are many "Sketch Snaps" (we will call them **snap points** in this document**)** and guides when drawing lines or shapes. This is implemented on purpose as it allows the user to draw uniform sketches with proper proportions. These features can be used in 2 main ways.

- First, when selecting a start point for a line or shape, mini yellow circles will appear as snap points. These should be selected as your starting points since they will give uniformity to your drawing. Below, the yellow snap points are on the horizontal and vertical axis of the circle.

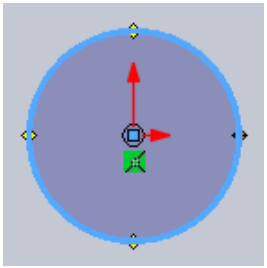

- Second, when drawing a line, shape, or selecting a starting point, you will have the option to follow along dotted lines. These are perfectly horizontal and vertical lines that generally are parallel or perpendicular to previously drawn vertices or the origin (the intersection of the two red arrows). These should be selected as a drawing point also to give your drawing uniformity.

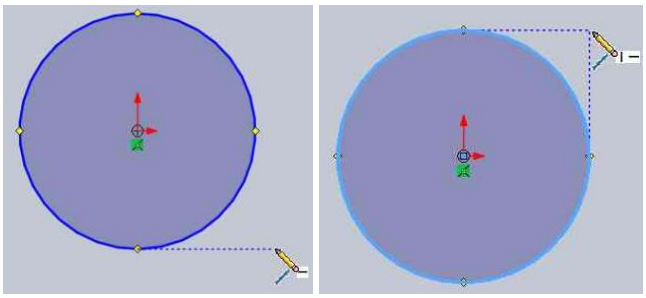

Images created by Mouiz Majid

The creator of the video practices the use of these features, and they result in a well-formed and designed model.

At 2:30, the creator gives proportion to the hypotenuse line of the nose plier jaw. He plans on making the vertex of the bottom end of the hypotenuse line intersect with a line that is 15 degrees above the horizontal axis of the center of the circle. To do this, he creates a line and converts it to **Construction Geometry**. This feature alters shapes and lines to only appear in the sketches as references, and for them to not effect the drawings shape at all. This can be done for lines only by either using the **Construction Geometry** feature or by selecting **Centerline** under the line options to draw one from scratch. For all other shapes, **Construction Geometry** should be used.

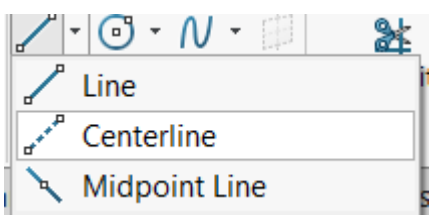

At 4:25, the creator draws a **Construction Geometry** line that references the 15-degree angle we drew on earlier to allow the pliers to be used correctly. He uses a **Midpoint Line** and selects construction geometry to make sure it does not alter the sketch's real properties.

At 5:57, after sketching a handle for the pliers, the creator wants to give it a 3D aspect. We can notice that the shape is not closed, it appears to be a curved 2D line. However, SolidWorks still lets you use 3D features on 1 dimensional sketches. In this case, it is

called the **Thin Feature** and becomes visible on the property manager for the extrude boss. It follows the same concepts as the regular **Boss-Extrude**, refer to page 8 for a refresher.

You have now applied your SolidWorks understandings to make a real-world part. You have used tools like **Line**, **Smart Dimension**, and **Boss-Extrude** to create a 3D model of part of a nose plier. This is yet another steppingstone for completing your journey to achieve the CSWA completion. Next, we will cover the **Cut-Extrude** command.

Video 3: Using Cut-Extrude on a Part

https://www.youtube.com/watch?v=RKIEQVR-qJw&ab_channel=SOLIDWORKS

This video shows how to apply **Cut-Extrude** on your part to fit a rotating axle (which you created earlier) in the center of the handle.

At 0:47, after the creator sketches a circle on the handles large plane, he plans to cut a hole out of it. To do this, the creator uses the **Cut-Extrude** feature. This feature is almost identical to **Boss-Extrude**, but instead of giving volume, this subtracts it. For the sake of consistency, we will cover the possible options for **Cut-Extrude** as well.

Click on a line or drawn plane, then select **Cut-Extrude**. This menu will appear on the **FeatureManager**.	Select the blind option, this dropdown menu shall appear.
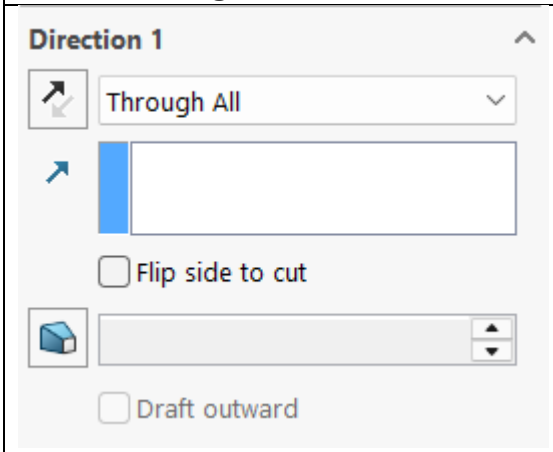 **Image C**	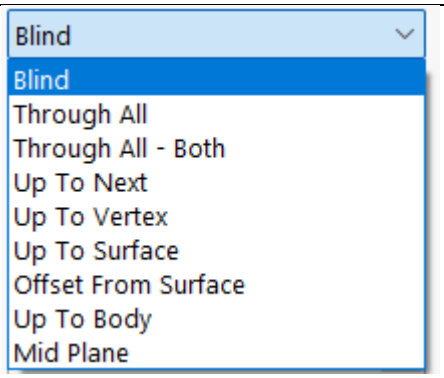

Images created by Mouiz Majid

Pause the video and take a moment to try all the **Cut-Extrude** options. Note the differences (Table 2):

Table 2. Cut-Extrude Options

Option	What does it do?	Usage
Blind	Cuts the sketch in one direction to a specific depth	Use when you know the exact measurement
Through All	Cut through the sketch until it passes everything in the model	For cutting a hole through everything
Through All - Both	Same as Through All, but cuts through on both sides	For cutting a hole through everything when in the center of a model
Up To Next	Cuts until the next face of the model	Cuts holes without going through other material
Up To Vertex	Cut to a selected point/vertex in the model	Used for precision cuts
Up To Surface	Cut until it hits a selected surface, which could be not flat	For making cuts fit to curved and uneven faces
Offset From Surface	Like up to surface, but you can specify a distance to stop cutting before a surface	When you need a hole to have a solid bottom (like a cup)
Up To Body	Cuts until hits a body	If using multiple solids in one part file
Mid Plane	Cuts equally on both sides of the sketch plane	For cutting out a gap within a solid material

Another feature visible in Image C is the angled cut feature. The user can select an angle in degrees and the cut will form at an angle instead of with straight(perpendicular) edges. Below is an example of a cut-out in a block. One with an angled cut-extrude of 0 degrees (left) and one with 20 degrees (right). Try it out yourself by entering different angle values in the numeric field (you can enter just the numeric value).

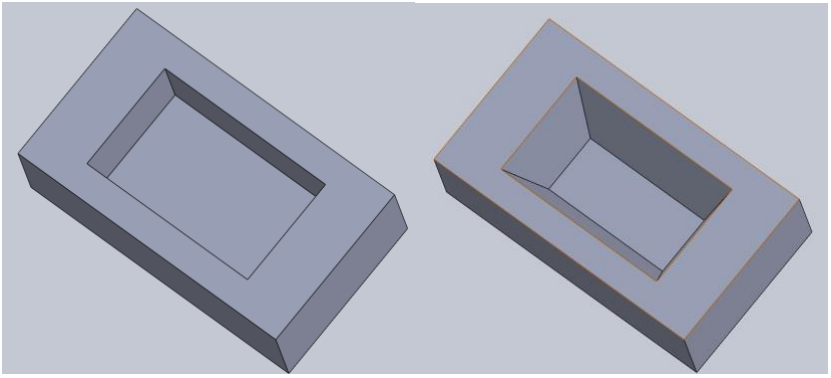

Images created by Mouiz Majid

At 1:30, the creator makes the original 2D sketch visible as he will use it for another cut. This is a useful feature since it allows you to take parts of your model and use their lines to edit them precisely.

At 1:45, the creator selects the center circle as he wants to cut half of the center circle material away. Recall when we gave the original sketch a 3D aspect; we selected mid-plane as our Boss-Extrude option. Therefore, this 2D center circle is in the direct middle of our model. Due to this, we can easily remove half of the center circle material by flipping the direction of our cut and confirming.

At 2:25, the creator intends to narrow the jaw of this nose plier, he does this by drawing a line on the face of contact of the part. Next, he will use this line to cut away extra material. Just like how we can Boss-Extrude with a simple line, we can Cut-Extrude with only one as well. The creator deselects the Flip Side to Cut option. This is so the extrude will cut the material on the outer side of the line instead of the inside.

Video 3B: Convert Entities

The video below explains how to use the **Convert Entities** tool. This tool is very useful in SolidWorks, especially when making cuts within other **Cut-Extrudes** in your models. In the CSWA practice exam, you will use this feature in question number 6 to make a cut out of a specific shape within a model.

Video created (visual and audio) and edited by Mouiz Majid

You have now learned the basics of the Cut-Extrude feature in SolidWorks. Next, we are going to cover the **Mirror** and **Fillet** features.

Video 4: Mirror and Fillet Commands

https://www.youtube.com/watch?v=vDJrohlryS4&ab_channel=SOLIDWORKS

In this video, we will use the **Mirror** command. This allows us to copy over our work to another side of the model so we do not have to edit it from scratch again. This commands helps save a lot of time. We will also use the **Fillet** command, which we can use to give a model rounded edges. This makes a model more visually appealing, instead of having sharp edges.

At 0:36, the creator intends to mirror the cut side of the jaw of the plier. He selects the front plane to mirror the feature, this means that the feature will be reflected relative to the front plane. Try mirroring the feature on the other two planes and see the differences. There are also other options for the **Mirror** command.

Feature Option	Example
Mirror Face/Plane This is the plane that the feature will be reflected across. Only one may be selected. It does not have to be a plane, it can be the face of a shape you already created.	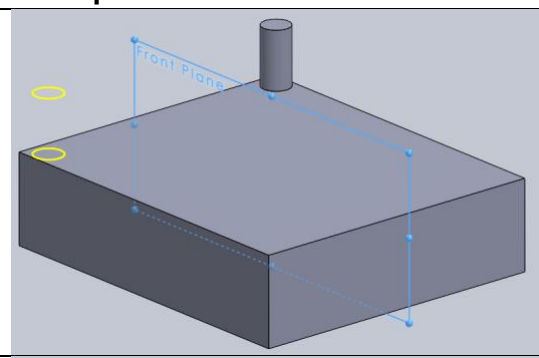
Secondary Mirror/Face Plane This allows you to select a second surface to mirror the feature across. Only one may be selected.	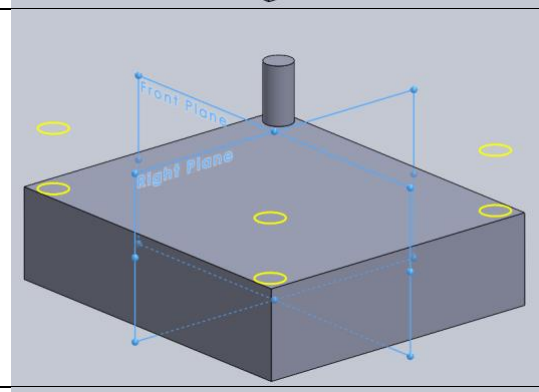
Features to Mirror This is the 3D shapes/parts that you want to mirror. Multiple may be selected. These will be copied across the **Mirror Face/Plane**.	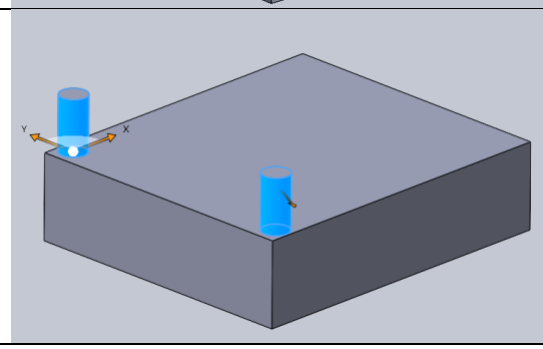

Images created by Mouiz Majid

At 1:19, after mirroring the desired feature, the creator wants to round the edges of the model with the **Fillet** command. He uses the default **Fillet** command presets, but we will go over all the possible options.

Type of Fillet	Image Example
Constant Size Fillet Creates the fillet around edges at a constant size.	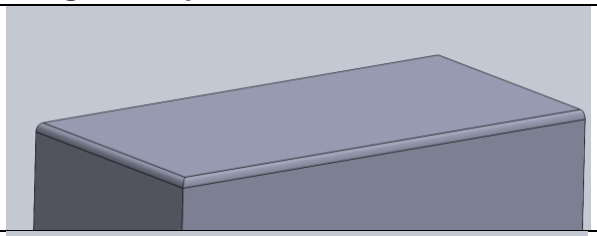
Variable Size Fillet Creates the fillet around edges at different sizes specified by the user.	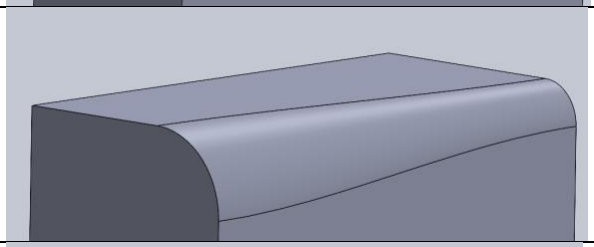
Face Fillet Make a fillet between two faces.	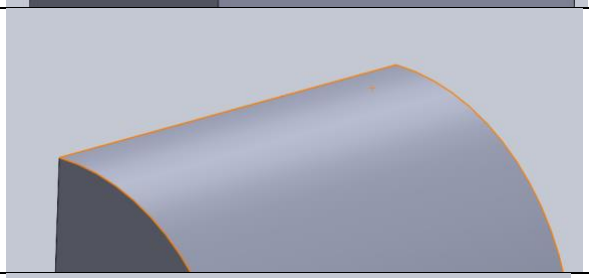
Full Round Fillet Select three edges and make a round fillet around them	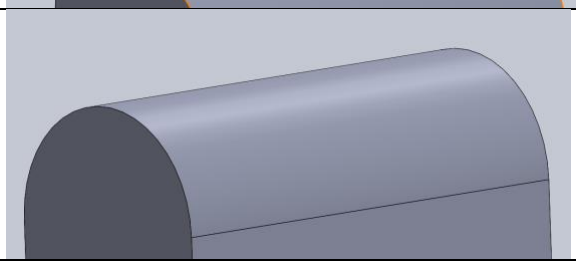

Images created by Mouiz Majid

Now, we have fully constructed one of our handles for our nose pliers. Make sure to save this part to your computer. Next, we will cover **Assembly Modeling** in SolidWorks.

Video 5: Assembly Modeling

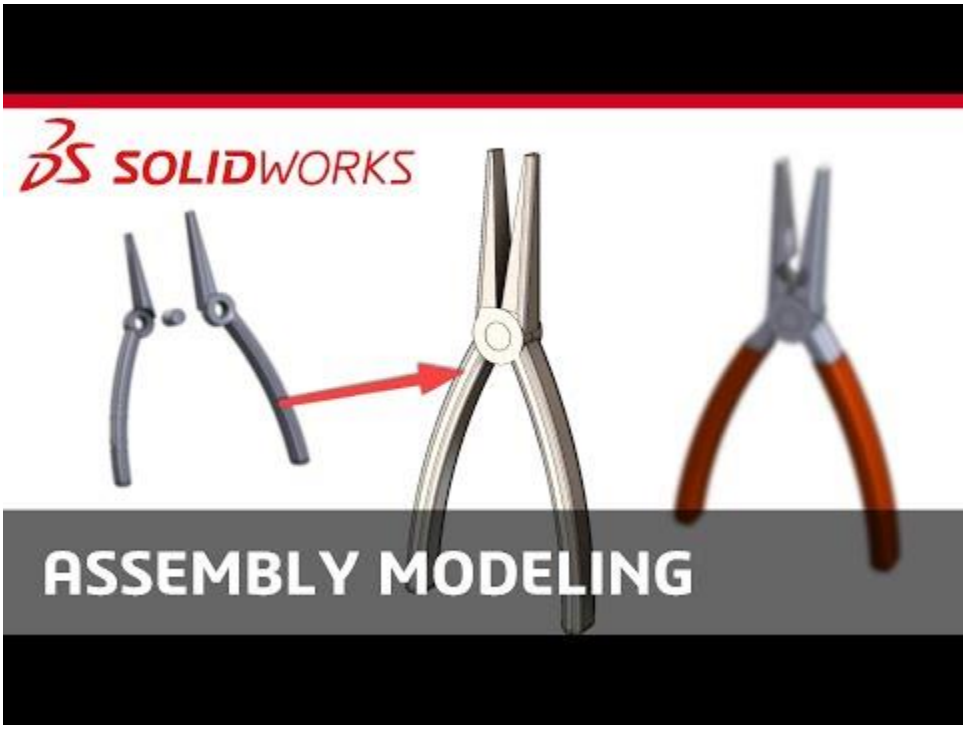

https://www.youtube.com/watch?v=XcOzOMelEyc&ab_channel=SOLIDWORKS

Now we can use the parts that we have created and combine them to make a real-world object. We can complete this by opening an **Assembly** file in SolidWorks.

At 1:04, the creator intends to open the part files to use them in the assembly. He uses the 3D Experience Platform, but this information is not needed for the CSWA exam. You may open the part files that you have saved to your computer locally and skip to 2:03.

At 3:27, the creator wants to create a second plier handle. He uses a shortcut that copies a part by holding control and left click while dragging the part. This may not work for you. Instead, you can navigate to the **Assembly** tab on the **CommandManager** and select **Insert Components**. Locate your part file in your files once more and place it into the view space.

At 6:16, the creator wants to mate the other handle onto the pin. Before he does so, he must rotate the handle so its inner side faces the other handles inner side. He does this by mating the circular faces on each handle coincidently, then selecting the **Flip Mate Alignment** pop up icon.

Trouble Shooting 2:
When you try this, you may not get the pop up to select this option. If you do not, navigate to the **PropertyManager** and select anti-aligned under **Mate Alignment**.

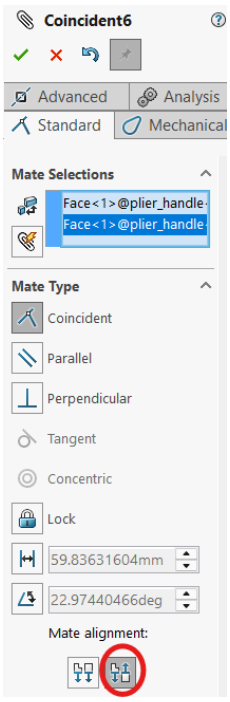

At 6:45, the creator uses a new method to mate the cylindrical face of the second handle to the plier's axle. You may attempt this method, but it may not work. If so, navigate to **Mate** under the **Assembly** tab on the **CommandManager**. Select the cylindrical face of both the plier axle and the handle. Confirm the **Coincident Mate**.

There are a couple more **Mate** options that the creator did not cover. Play around with different mates on your own and familiarize yourself with them.

From left to right in the image above, here are the descriptions oxf the **Mate** options.

Mate Option	Description
Coincident Mate	Aligns two faces, edges, or points so they lie on the same infinite plane or line.
Parallel Mate	Forces two entities (faces, edges, axes) to be parallel to each other, even if they don't touch.
Perpendicular Mate	Forces two entities to be at a 90° angle to each other.
Lock	Completely locks two components together — position and orientation.
Distance Mate	Keeps two entities a fixed distance apart.
Angle Mate	Positions two faces, edges, or planes at a specific angle relative to one another.
Flip Mate Direction	Reverses the direction of a mate without deleting it — useful when parts are facing the wrong way.

The **Angle Mate** will be used later in the CSWA practice exam. Below on the left is an **Angle Mate** of 120 degrees between the outer frame of the laptop screen (grey) and the body of the laptop (pink). On the right is the same example but with an **Angle Mate** of 60 degrees.

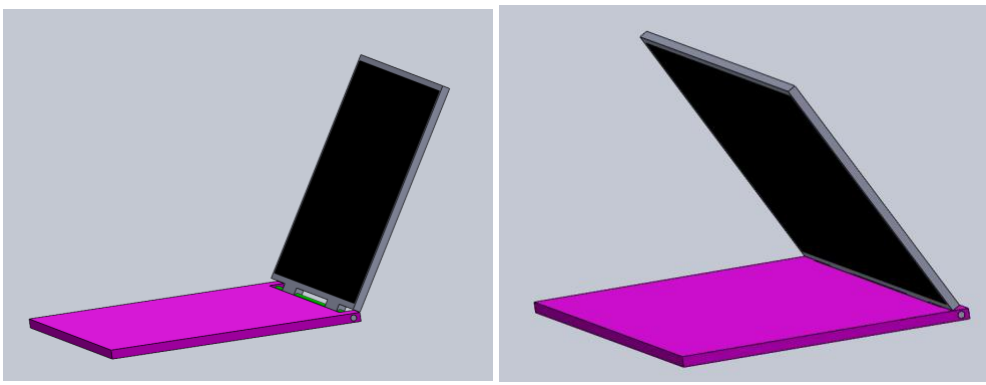

Images created by Mouiz Majid

At 7:10, the creator discusses locking parts and the 3DExperience Platform. This section as well as the remainder of the video may be skipped.

You have now been introduced to **Assemblies** in SolidWorks. These skills will be tested in the last questions of the CSWA exam. The next lesson will touch back on **Parts** once more cover the **Pattern** command.

Video 6: Patterns

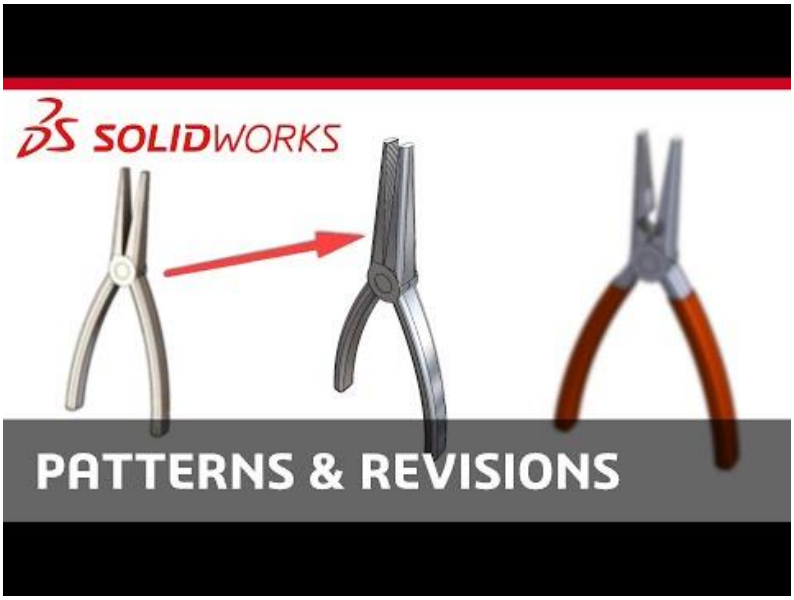

https://www.youtube.com/watch?v=zjMe-0NmoqY&ab_channel=SOLIDWORKS

In this video, the creator covers both **Patterns** and **Revisions** (updates to your **Assembly**). For the CSWA exam, knowledge of revisions is not required. Therefore, it is recommended that you only watch the videos following the timestamps below.

At 1:01, the creator wants to add a knurl to the jaws of the pliers. To do this, he uses the **Linear Pattern** feature. He starts by drawing a triangle on the side of the jaw.

At 3:06, the creator wants to cut out the triangle he just sketched to create the first line of the knurl.

Trouble Shooting 3:
You may encounter a problem when you use **Cut-Extrude** where the cutout is diagonally placed on the jaw, an example is shown below. This happens because the surface we drew our triangle on is at an angle.

If you did not encounter this issue, you may skip to the second half of the page 2 pages down, but it is recommended that you read this part as well. We will cover skills that will make 3D modelling a bit easier, and although they won't help with the CSWA exam, it can increase your knowledge in SolidWorks in general.

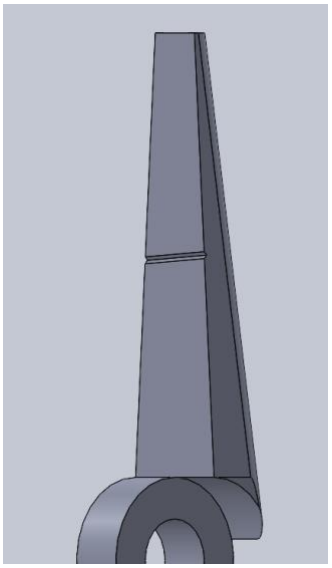

To fix this issue, we must create a new **Reference Plane** that will allow us to sketch a non-diagonal triangle on the **Front Plane**. Before you do this, undo the edits you just created (the cut and triangle sketch) by deleting them on the **Rollback Bar** or hitting CTRL+Z until they are gone. Navigate to the **Title Bar** (where **File** and **Edit** are), hover over **Insert** and select **Plane** under **Reference Geometry**. With the **PropertyManager** open, select the **Front Plane** as the first reference, then select the parallel option right under it. Then select the edge of the diagonal face of the plier jaw for the second reference (highlighted in orange below).

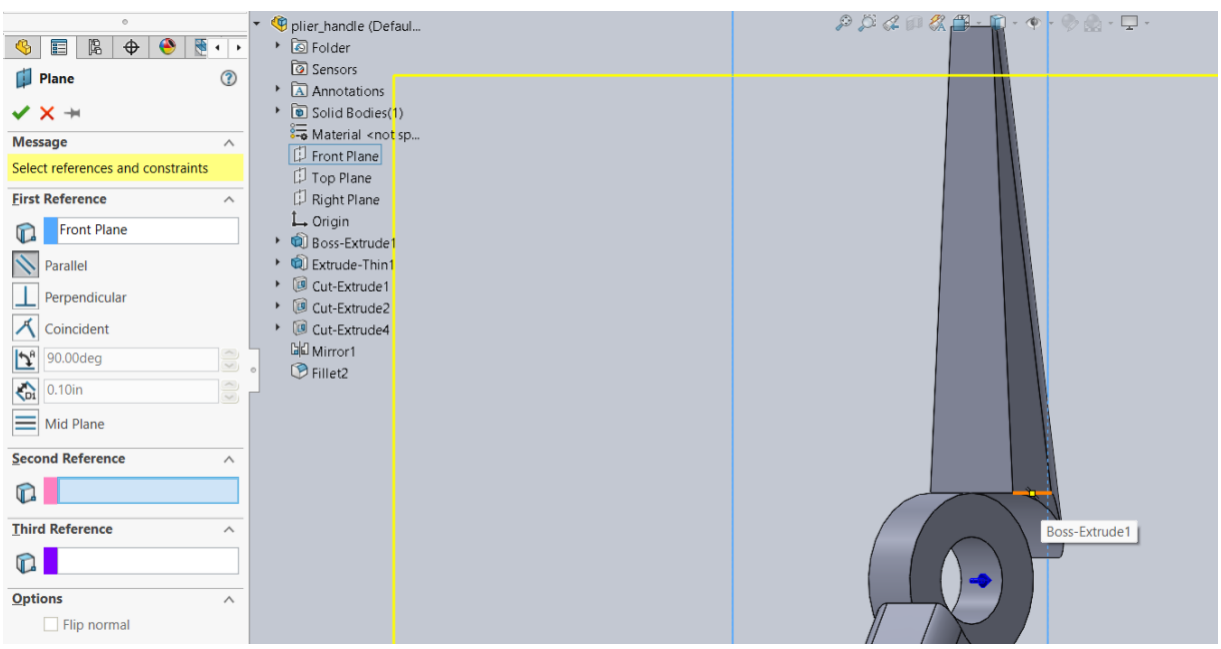

Confirm your choices, you should now have a plane that is straight as well as intersecting with the bottom of the diagonal face we want to cut through. While the plane is selected,

grab the top right corner with the mouse and make the plane bigger than the jaw of the piler.

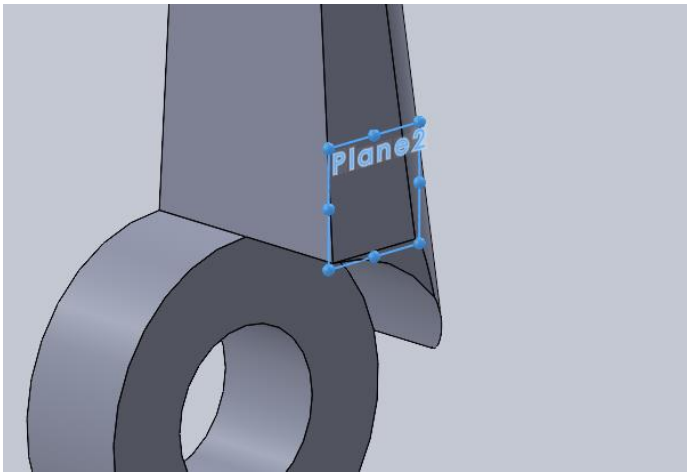

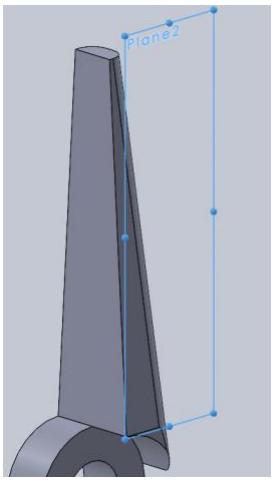

Now, we are ready to sketch. Right click the plane and hit **Sketch**. Follow the video instructions on making the triangle and using **Cut-Extrude**. This time, select the **Through All** option and confirm the feature.

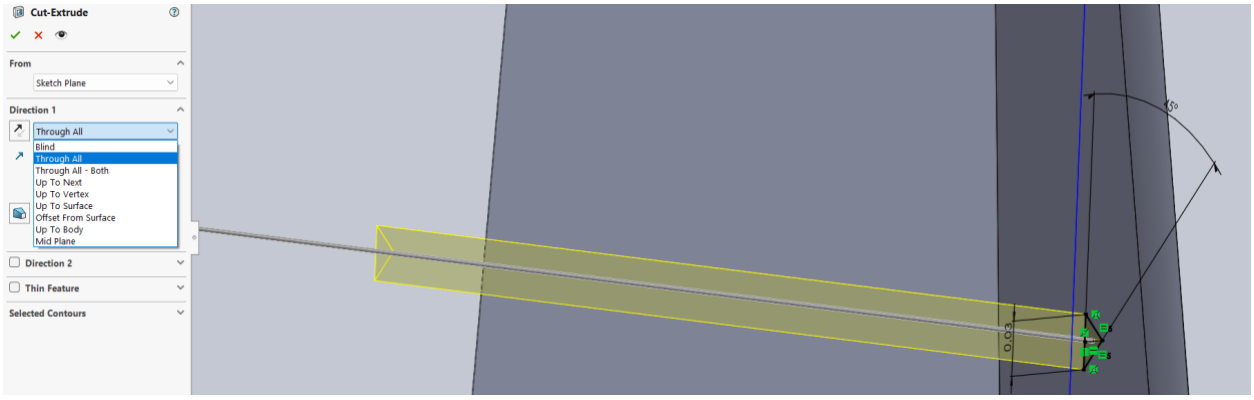

All images in this section were created by Mouiz Majid

You now have a straight knurl. Continue the video at 3:19. The creator will now use the **Linear Pattern** feature to copy the knurl all over the tip of the plier jaw. This feature helps save time and effort as it saves you the hassle of redoing edits you've already done before.

At 4:38 and beyond, the creator touches on **Revisions** and the **3DExperience Platform**. The remainder of the video may be skipped.

We have now completed the playlist "Beginners Guide to SolidWorks". We still need to cover more features and tools within SolidWorks, so the remainder of the lessons will contain videos made by other creators to teach you the knowledge. Next we will cover **Advanced Boss and Cut Features** in SolidWorks.

Videos 7-9: Advanced Boss and Cut Features

In all of SolidWorks tutorials you have viewed so far, you may have noticed that they follow a similar pattern. That is, the creator will draw a simple sketch, apply dimensions to it, then use the feature or tool that is the topic of the video to showcase its abilities and to teach you how to use it. After completing the previous sections, you may have enough expertise to watch tutorial videos at a higher playback speed or by skimming through them whilst still gaining the knowledge shown in the content. If you do not want to watch the entire 9 minutes of this video, it is recommended that you increase the playback speed or skip through using the arrow keys.

Also, since you already know how to sketch basic shapes and apply dimensions, another learning approach for new features and tools is to open the SolidWorks program and play around with them yourself. This will give you a hands-on teaching experience which allows you to make mistakes and explore however much you desire. If you ever find yourself lost, you may return to this section and watch the video to help yourself.

Video 7: Revolved Boss and Cut Features

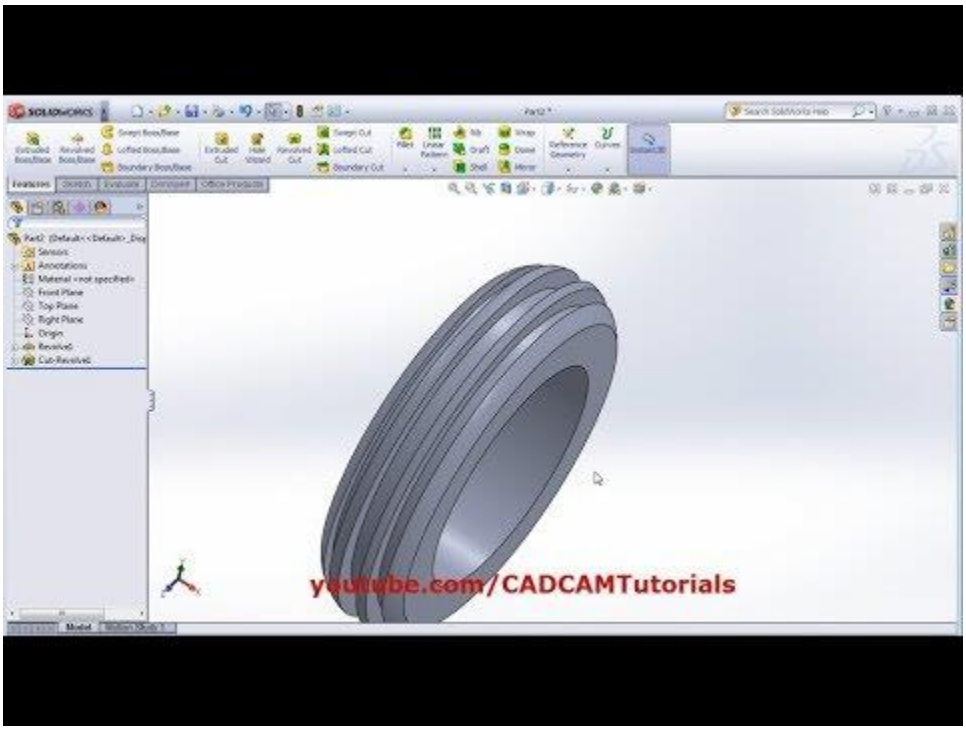

https://www.youtube.com/watch?v=zoDILEL9zok&ab_channel=CADCAMTutorials

This video covers the basics of using the **Revolved Boss** and **Cut** feature in SolidWorks.

Video 8: Swept Boss and Cut

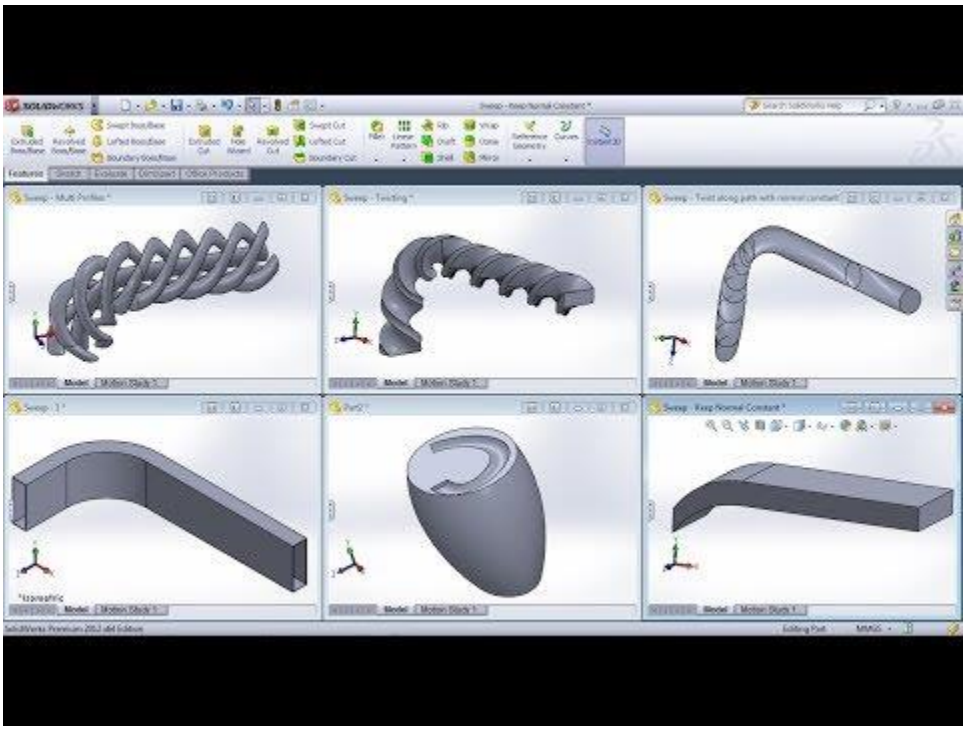

https://www.youtube.com/watch?v=h1PkHXt1YJ4&ab_channel=CADCAMTutorials

This video covers the basics of using the **Swept Boss** and **Cut** feature in SolidWorks.

Video 9: Lofted Boss and Cut

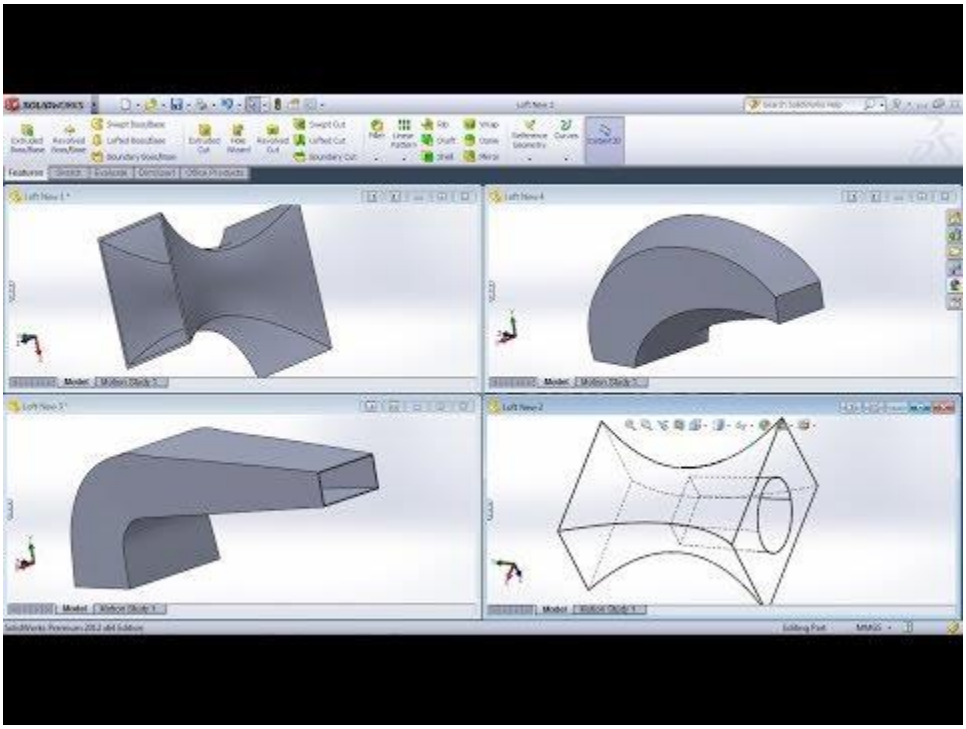

https://www.youtube.com/watch?v=Lfkh1qpUkKw&ab_channel=CADCAMTutorials

This video covers the basics of using the **Lofted Boss** and **Cut** feature in SolidWorks.

I'll now explain the differences between each of these features and why you should use them.

A Revolved Boss or Cut is created by rotating a 2D sketch around an axis. This is especially useful for parts that are symmetrical around a center line, such as bottles, wheels, pulleys, or turned machine parts. It requires one sketch for the profile and an axis of revolution.

Example: This chess pawn piece was created by sketching the front face of the shape, then using revolved boss around the center axis with a value of 360 degrees.

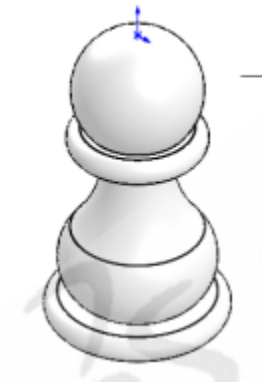

A Swept Boss or Cut on the other hand, is used when you want to extend a 2D profile along a specific path. This is ideal for objects that follow curves or long paths, such as pipes, tubes, wires, handles, or grooves. To create a sweep, you need two sketches: one for the profile and one for the path.

Example: This Allen key was made by sketching a hexagon shape on the right plane. Then an L shape on the front plane. After that, swept boss was used to cover the L line in the shape of the hexagon.

The Lofted Boss or Cut allows you to create smooth transitions between two or more profiles. This tool is useful for parts that change shape along their length or have more organic, freeform geometry, such as aircraft wings, grips, or ductwork. It requires at least two profile sketches and can also use guide curves to control the transition.

Example: This part was created by using extrude boss on a circle on the front plane. Then after drawing 2 circles that are normal to the front plane and spaced away from each other using reference planes, lofted boss was used to make the cap part of the model.

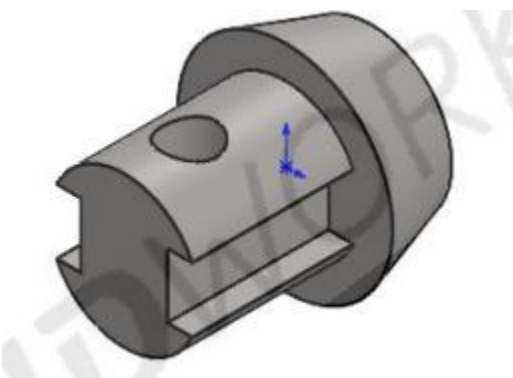

The above images were taken from SolidWorks' CSWA exam practice problems

The main differences are that Revolve creates shapes by spinning around an axis, Sweep creates shapes by dragging along a path, and Loft creates shapes by blending between multiple profiles. Together, these tools allow you to model a wide range of parts, from simple symmetric objects to highly complex, organic designs.

Congratulations, you have completed all the lessons covering **Parts** and **Assemblies** in SolidWorks. You know have sufficient knowledge to complete sections 2 and 3 of the

CSWA exam. Next, you will learn about **Drawings** in SolidWorks, which will cover skills needed to complete the first section of the CSWA exam.

Video 10: Drawings

https://www.youtube.com/watch?v=dZGD2RuuTXE&ab_channel=ChampionXperience

This video starts by stating each view and explaining them one by one and preferably have a picture for each view for easier understanding.

The video includes the correct answers for a sample of multiple-choice questions related to drawing, but the video does not include the full explanation of why other choices are incorrect. The sections below provide the foundational understanding of the concepts you need to get a fuller understanding of the Drawing competencies required for the CSWA exam. With this, you will be able to solve any questions regarding different drawings and view types under the Drawings competencies section of the CSWA exam.

Model view:

This view is used to transfer the 3D model's original view onto the drawing sheet. It serves as the base for all other drawing views and can be placed in any orientation of the model. This view is typically inserted first and establishes the layout for the rest of the drawing. It remains linked to the original model, so any changes made to the 3D part will automatically update the drawing.

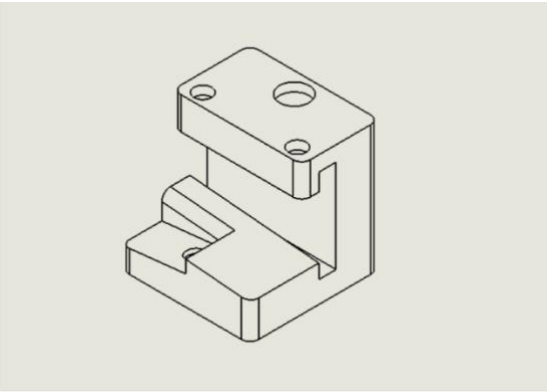

Projected view:

This view allows you to create extra views from the base view, displays the part from different perspectives, and is crucial for the visual comprehension of the entire part. These views are automatically aligned with the base view, making it easier to maintain accuracy and consistency. Projected views typically include standard orientations like top, right, or left and are essential for showing all relevant sides of a model.

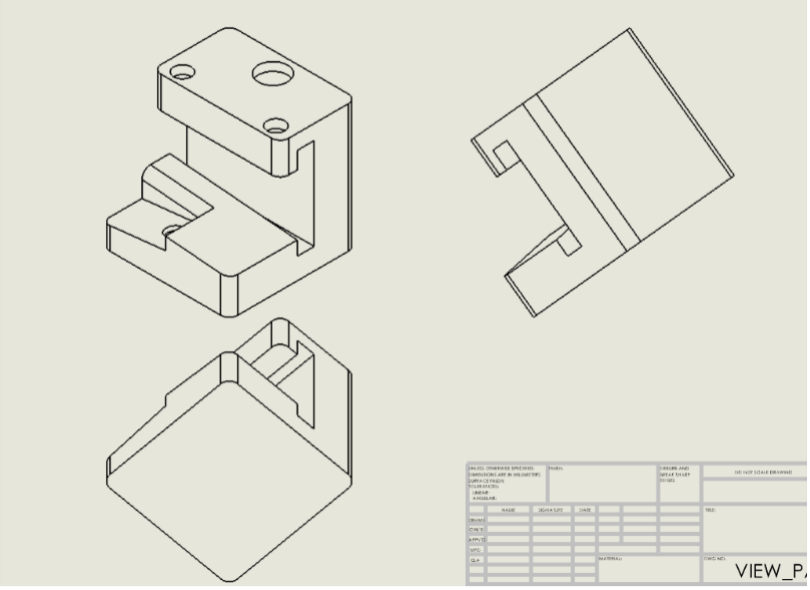

3:30 –3:45, 4:35-5:40 Section view:

This view is crucial for displaying internal features or holes that aren't visible from the exterior view. It does this by cutting through a part and drawing a cut line on the view. SolidWorks then displays the interiors along the line. This helps clearly show hidden geometry such as cavities, internal threads, or intersecting features. Section views are especially useful in manufacturing and inspection, where full internal detail is necessary.

also make a note that the aligned section needs to be adjusted and how to adjust.

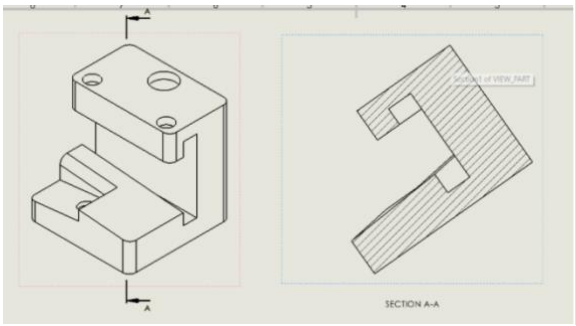

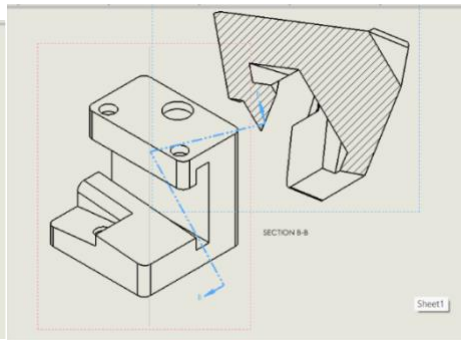

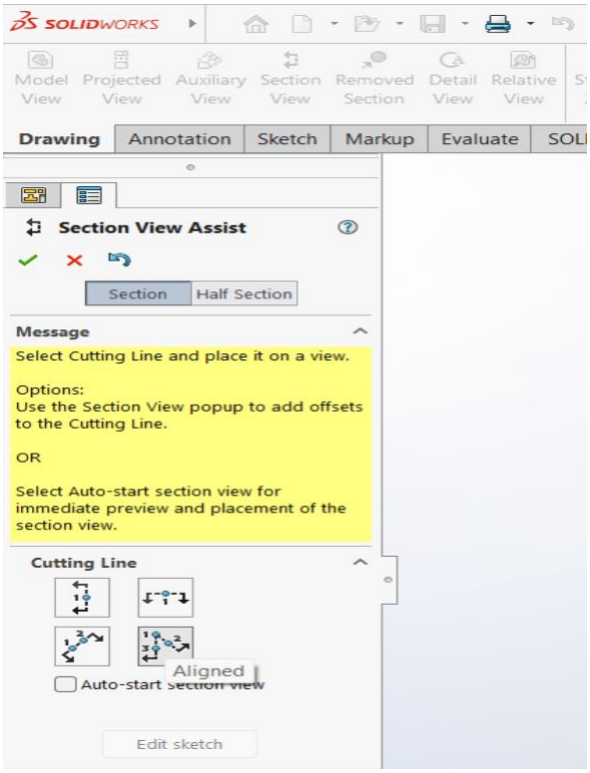

5:43 –4:14 Detailed view:

This view is helpful for highlighting holes, threads, or any other small feature of the model. To use it, draw a circle around the area and SolidWorks will enlarge it into a separate, zoomed-in view. It zooms on small parts of the model that are difficult to view in a normal view. This makes it easier to apply precise dimensions or show intricate geometry clearly. Detail views are especially valuable when documenting fine features that require close attention during manufacturing or inspection.

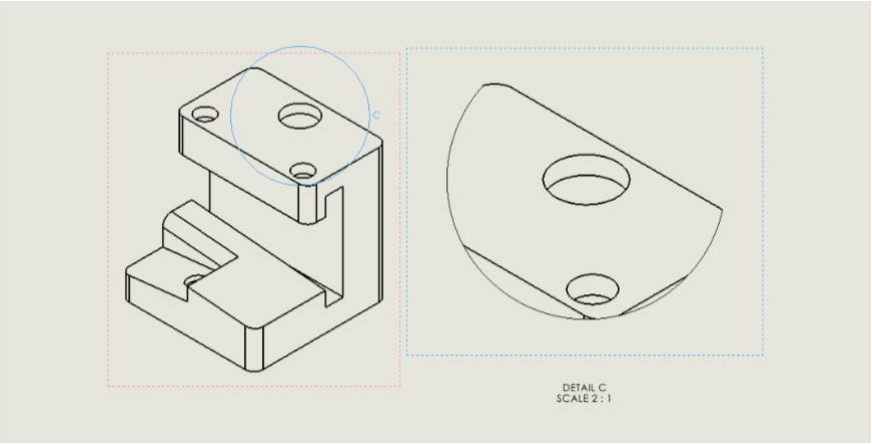

3:46-4:18, 5:30-7:00 Crop view:

To use it, draw a closed shape around the area you want, as it only displays the area that is shown. This makes it easier to focus on just the desired small portion of the model. Everything outside the boundary is hidden, helping reduce visual clutter on the drawing sheet. Crop views are especially useful when dealing with large or complex parts where only a specific section needs to be detailed.

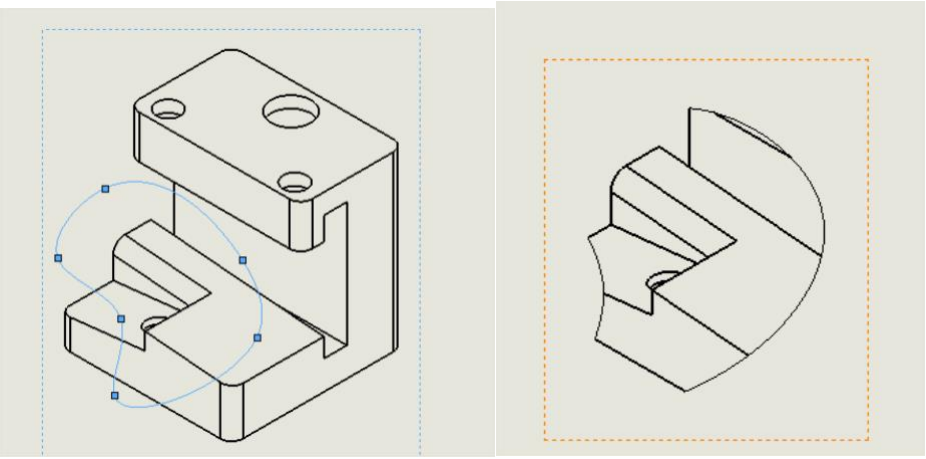

6:01-6:27 Broken out view:

It allows you to cut out a lengthy model that would take up a lot of room. The model dimensions remain unchanged, but the middle section is removed, making the drawing more compact. It is a more effective method of seeing both sides of a lengthy section without compromising any details. This view is especially useful for long parts like rods, pipes, or beams, where the middle portion adds no new information. By using a broken view, you can save space while still clearly showing the important ends of the part.

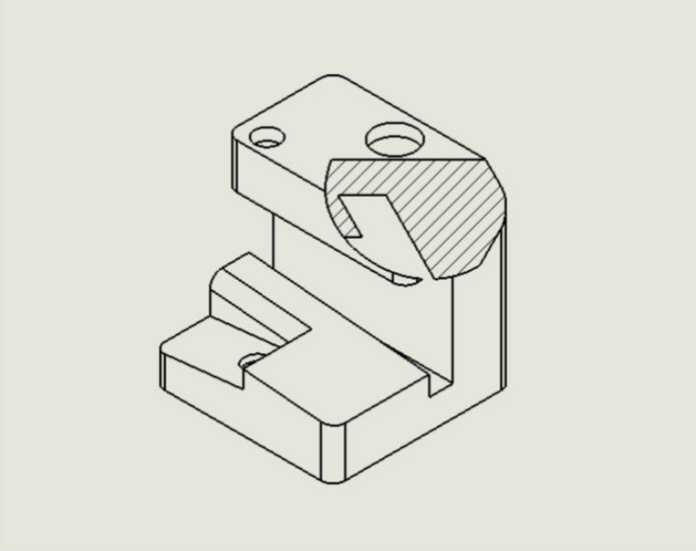

Auxiliary view:

It is useful for displaying features that are tilted or on an angle because it projects the drawing's geometry into a perpendicular angle or face of the model, showing the true size and shape of a small feature of the drawing on an angled surface. This is important because angled features often appear distorted in standard views like front or top. An auxiliary view corrects this by providing an accurate, undistorted representation, making it easier to apply dimensions and inspect the feature.

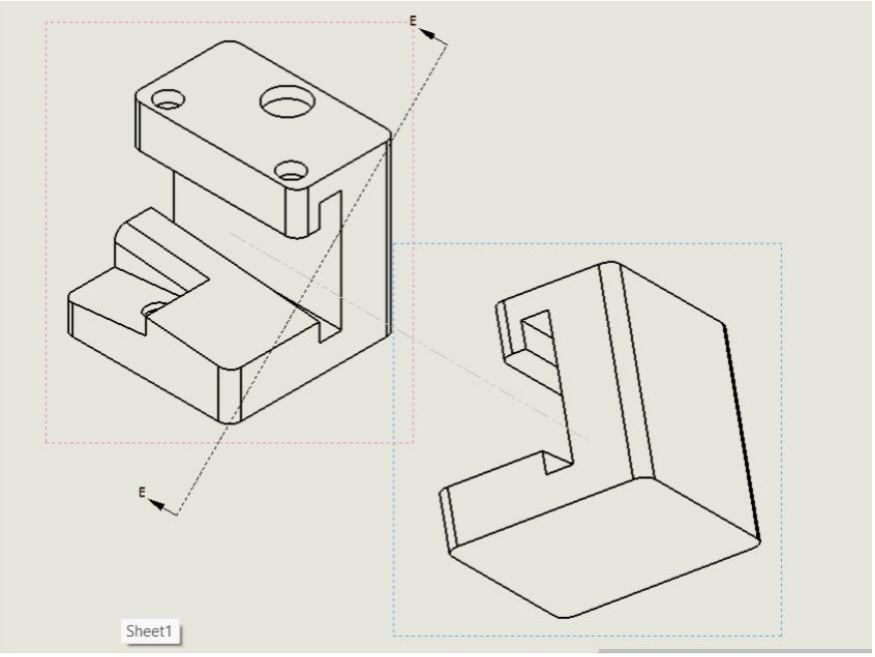

Break view:

It interrupts a view by cutting out a portion of it, and it adds break lines to a selected view so you can display a drawing view of a large-scale part on a smaller-sized drawing sheet. This helps reduce the overall length of the displayed view without changing the actual dimensions of the part. Break views are especially helpful when documenting long, uniform features like pipes or bars, where the middle section doesn't contain important details.

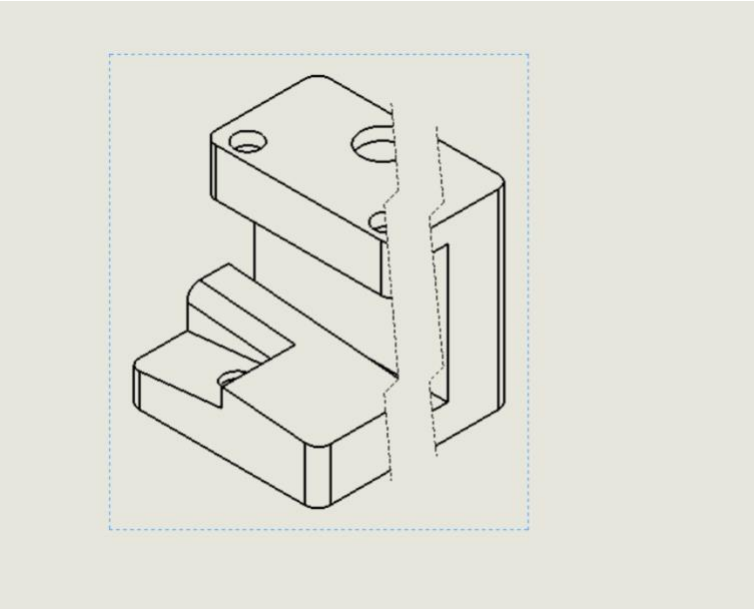

Every image in this section created by Mohamed Sidahmed

Alternate position views:

It is very helpful for visualizing mechanisms like doors or levers because it can show multiple views on assembly drawings and overlay a dashed outline of a component in a second location to show its range of motion. This feature is called an Alternate Position View, and it allows you to display two or more positions of a moving part within a single view. It helps illustrate how components interact or move without needing to create multiple separate drawings, making it ideal for assemblies with rotating, sliding, or hinged parts.

Congratulations, you have now finished all the video lessons and have built a solid foundation on the fundamentals of SolidWorks. Here's a quick summary of what you learned.

1. What SolidWorks looks like, the Interface, making your First Part, and the basics of the Line command
2. Making a real-world part using Sketch and Boss-Extrude
3. Shaping a part with Cut-Extrude
4. Touching up a part with Mirror and Fillet
5. Joining parts in an Assembly to make a usable tool
6. Utilizing Patterns to increase work efficiency
7. How to use advanced Boss and Cut features
8. The different View options within Drawings

We can now begin to cover the CSWA exam questions.

Practice Exam Questions

Let's now transition into studying for the CSWA exam. This section will show video tutorials on how to solve the questions of the CSWA practice exam. You can either try the practice exam yourself and refer to the videos to check your answers or watch the videos first and try the exam after. It is truly up to you.

Prerequisite knowledge:

The CSWA exam requires you to know how to work with **Global Variables**. These are variables that can be used anywhere in the SolidWorks program to set to your model its values, angles, measurements, etc.

Specifically, in the CSWA practice exam questions 3 and beyond, you must answer the weight of a model after modifying certain parameters of it. You can either recreate the model completely with new parameters every time, or you can set certain model dimensions to a **Global Variable** and change them whenever the question requires it. The latter is a much more efficient and undemanding option.

Let's set up **Global Variables**:

Navigate to the gear icon on the **Title Bar** (the same place where File, Edit, and View is). Go to the section called **FeatureManager** and press on it to view its settings. Go to **Equations** and select Show, then press OK.

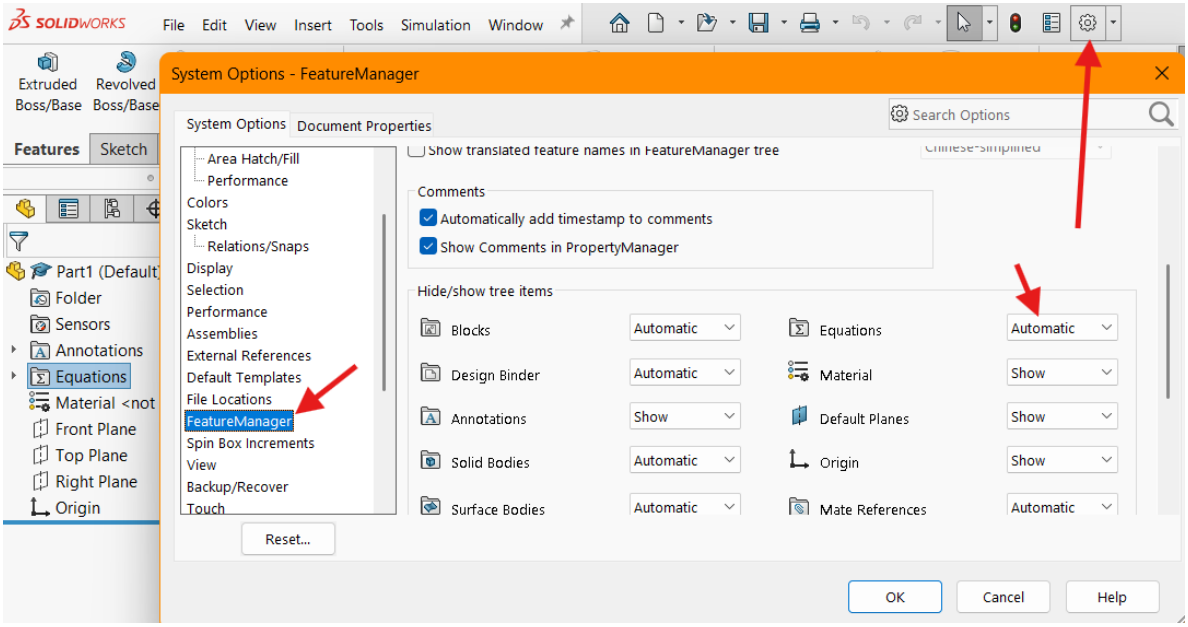

Now the **Equations** feature is on your **FeatureManager**. **Equations** is used to set **Global Variables**. The use of this feature is recommended for answering the **Part** questions in the practice exam.

Again, as mentioned above, there are clear advantages to using Global Variables instead of just manually modifying dimensions and values as you create and adjust parts. Please watch the video below which teaches you why and how to use **Global Variables** in a real SolidWorks file.

Video A: Global Variables

This feature is very useful as the variables change in different questions and setting them individually is problematic since they cannot be easily changed with so many other smart dimensions set in a part.

Download the Practice Exam:

Open the following link on your browser.
https://www.solidworks.com/certifications/mechanical-design-cswa-mechanical-design

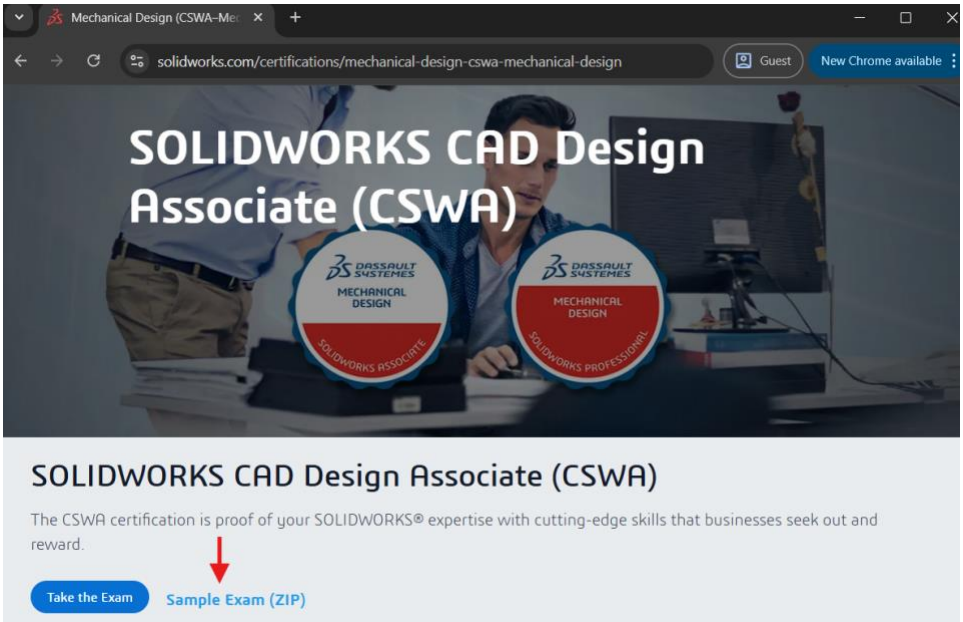

Click on **Sample Exam (ZIP)**, this will download the practice exam folder onto your computer. Within the folder, you will also find three SolidWorks parts: chain_link.SLDPRT, long_pin.SLDPRT, and short_pin.SLDPART. You will use these parts to create an assembly in Part 3, questions 7 and 8 in the practice exam, so do not delete them.

Open the CSWASampleExam pdf in your browser. This document contains the practice questions that we will be answering. Whether you are reading the answer tutorials before or after you try the practice exam, you should have easy access to both the document and the SolidWorks program. There are two recommended approaches to doing this.

First, you can resize both the browser window and program window to fit onto your screen, making both visible at one time.

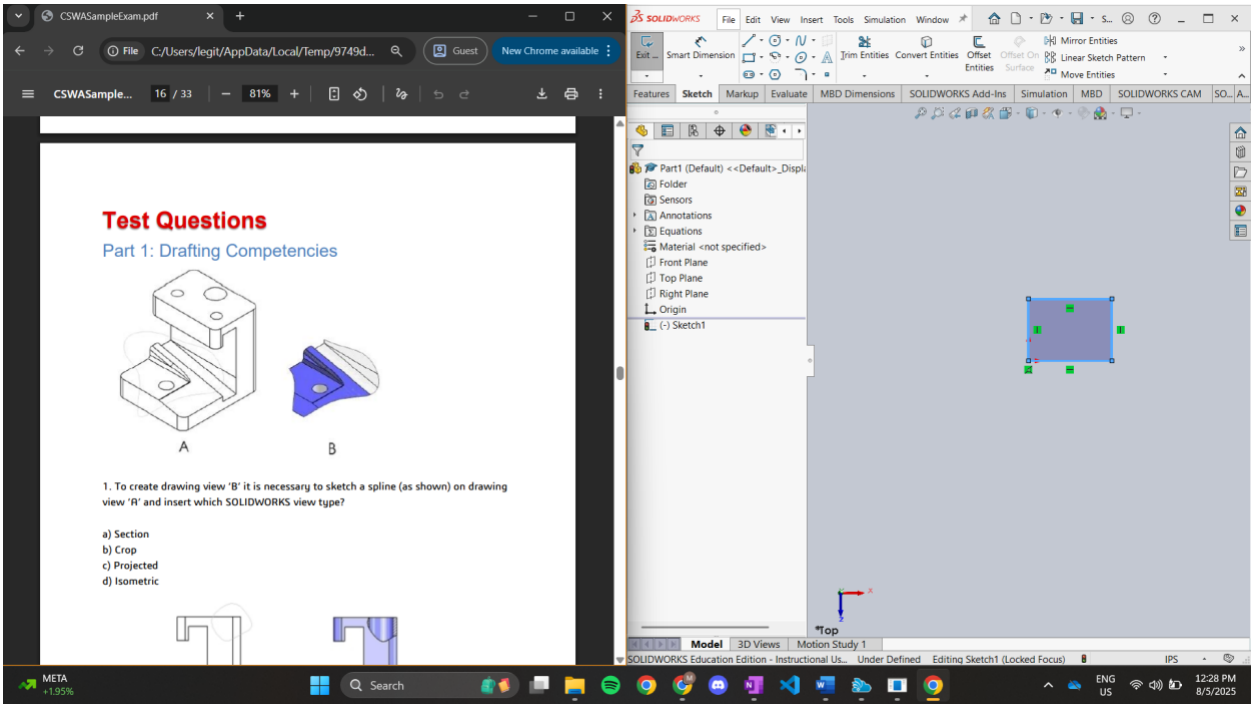

Or you can keep both windows maximized and simply use ALT + TAB on Windows or Command + Tab on Mac to quickly switch between the two. Below is a GIF showing how it works.

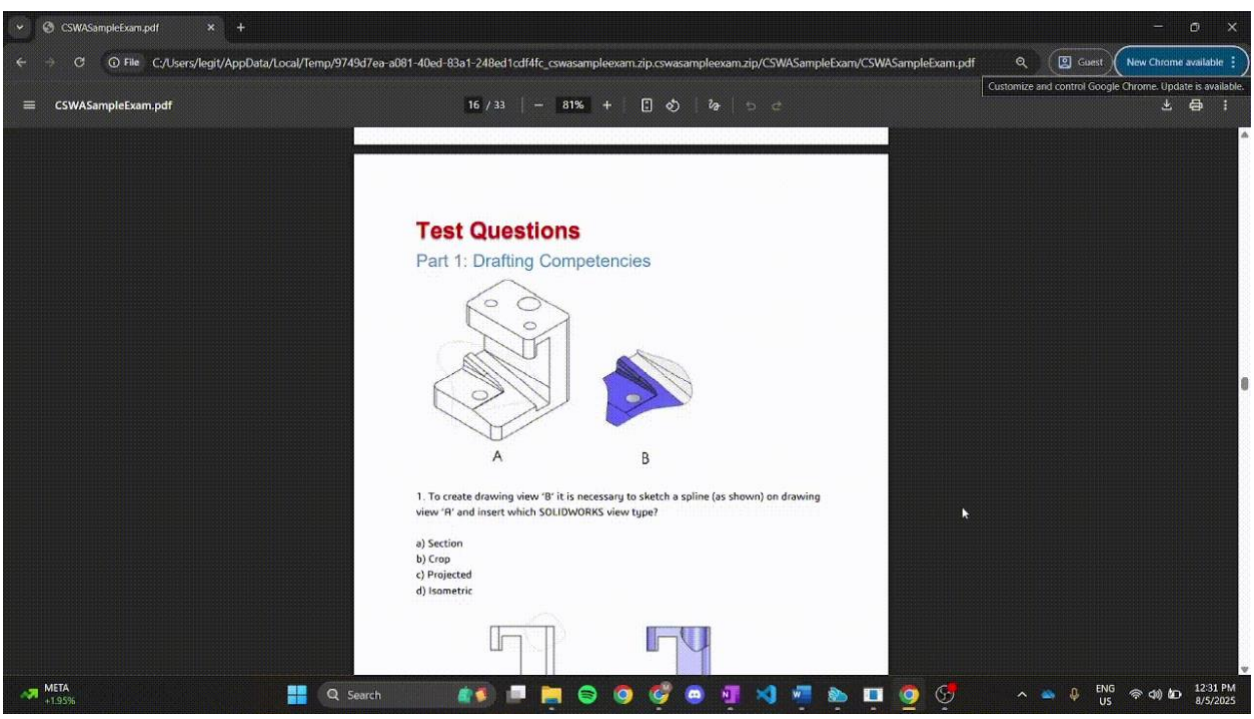

With your environment set up, you are ready to begin the CSWA practice exam.

As mentioned before, there are many approaches to studying with the following section. Two common approaches are: first watch all the video tutorials that answer the questions, then try them for yourself OR first try the CSWA practice exam on your own, then refer to the videos when you get stuck. It is entirely up to you on how you would like to learn using the material. Good luck.

Question Video Tutorials:

In this section, video tutorials will be posted that show you how to answer the questions of the CSWA practice exam.

Question 1: Drawings Views 1

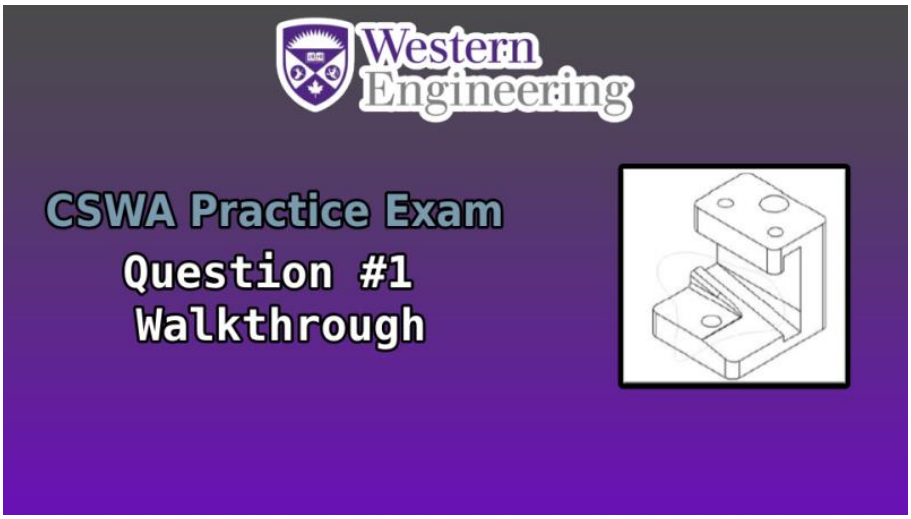

At 1:24, I use **Section view**. To learn more about this tool, navigate to the section: **Learning the program-> Lessons for learning the basics of SolidWorks -> Section view**.

At 1:56, I use **Crop view.** To learn more about this tool, navigate to the section: **Learning the Program -> Lessons for learning the basics of SolidWorks -> Crop view**.

At 2:43, I use **Projected view**. To learn more about this tool, navigate to the section navigate to: **Learning the Program -> Lessons for learning the basics of SolidWorks -> Projected view.**

At 3:37, I use the **Isometric view.** To learn more about this tool, navigate to the section: **Learning the Program -> Lessons for learning the basics of SolidWorks -> Video 10**.

remmber to change the imdede video linls with the new one

Question 2: Drawing Views 2

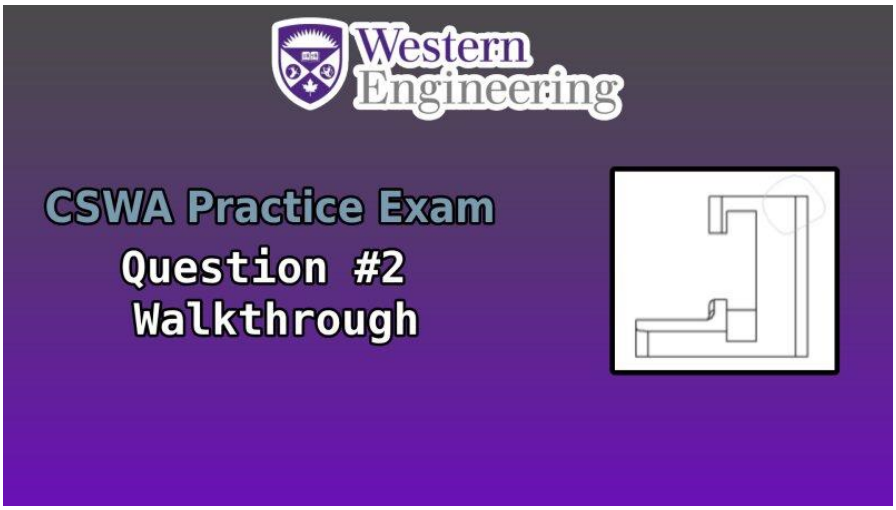

At 0:49, I use **Aligned Section view**. To learn more about this tool, navigate to the section: **Learning the program-> Lessons for learning the basics of SolidWorks -> Section view**.

At 1:59, I use **Detailed view.** To learn more about this tool, navigate to the section: **Learning the Program -> Lessons for learning the basics of SolidWorks -> Detail view**.

At 2:48, I use **Broken out section view**. To learn more about this tool, navigate to the section navigate to: **Learning the Program -> Lessons for learning the basics of SolidWorks -> Broken out section view.**

At 3:43, I use the **Section View.** To learn more about this tool, navigate to the section: **Learning the Program -> Lessons for learning the basics of SolidWorks -> Section view**.

Question 3 - 2D Sketching

This is the first question where you will be creating a 3D model from scratch in SolidWorks.

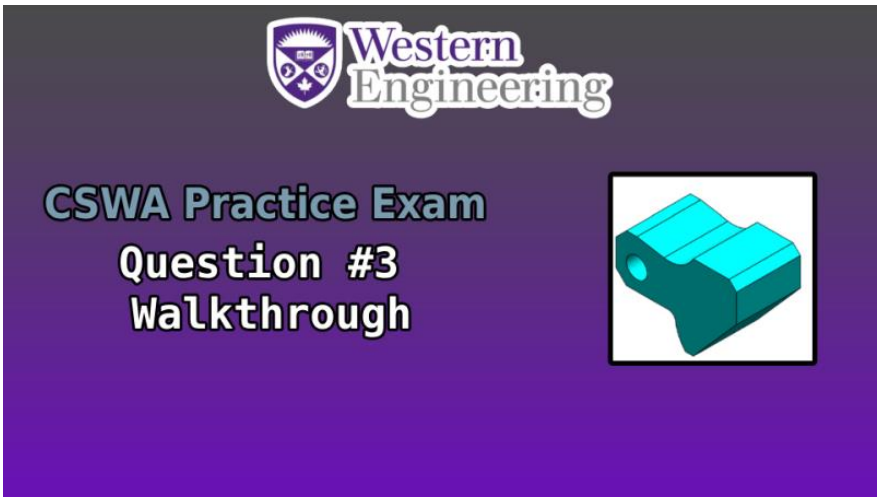

At 0:28, I use **Global Variables**. To learn more about this tool, navigate to the section: **Practice Exam Questions -> Prerequisite Knowledge -> Video A**.

At 1:05, I use **Construction Lines**, these lines do not affect the shape of your model and are only used for reference purposes. Read the description on **Construction Lines** in the section **Learning the Program -> Lessons for learning -> Video 2 description**.

At 4:12, I start sketching the shape with the **Line** tool. For a refresher on how the line tool works, navigate to: **Learning the Program -> Lessons for learning -> Video 1 -> Video 1B**.

Question 4 - Reevaluating Parts

This question involves changing **Smart Dimensions** values to reevaluate the mass of a part. No 3D modelling is necessary for solving this question.

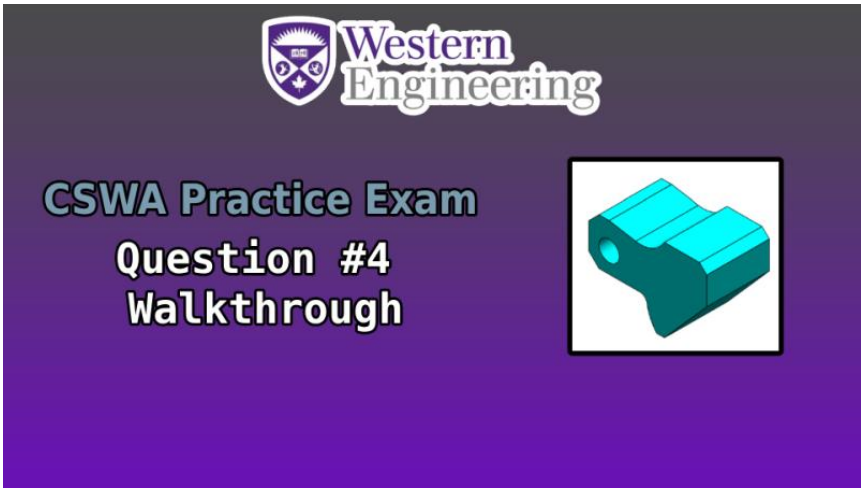

Question 5 - Cut-Extrude

This question uses the same part as the previous 2 questions and involves using 3D features such as **Cut-Extrude** to change its characteristics.

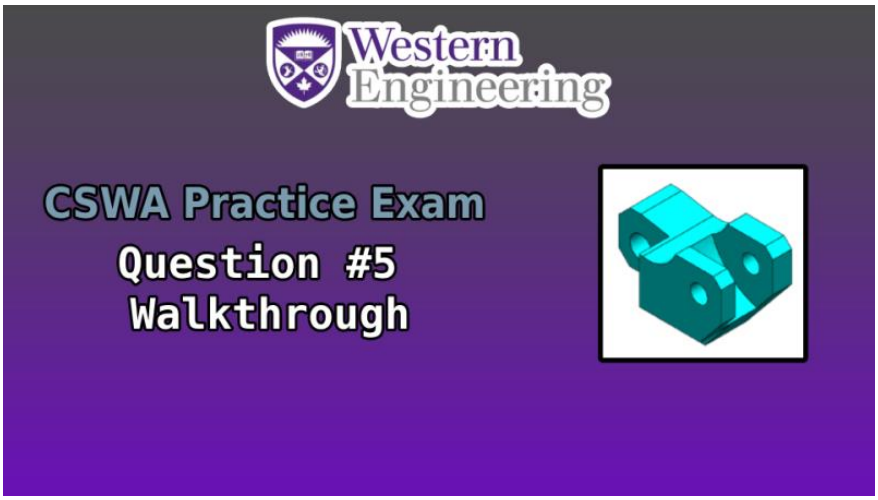

At 5:56 I use **Convert Entities** to help me make a **Cut-Extrude** that goes into the model. For a review on how this feature works, navigate to: **Learning the Program -> Lessons for learning -> Video 3 -> Video 3B**.

Question 6 - Offset & Features

This question uses the same part as the previous 3 questions and exercises the users' skills on making precise cuts and edits with **Convert Entities** and **Offset Entities**.

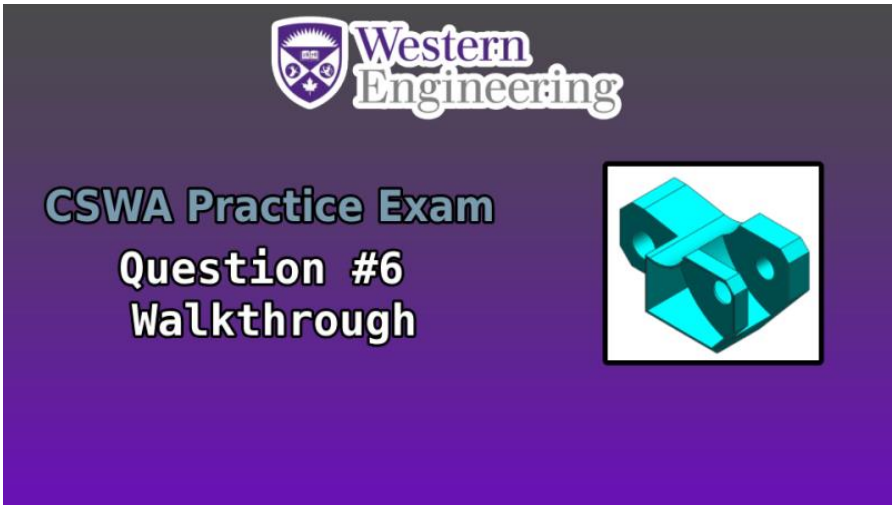

Question 7 - Assembly: Mates

This question involves creating an **Assembly** with the parts provided in the CSWAsampleexam folder.

This question tests your knowledge on **Mating** within **Assemblies**. For a review on this topic, navigate to: **Learning the Program -> Lessons for learning -> Video 5**.

At 4:34, I also use **Angle Mates**. More information on these types of mates can be found in: **Learning the Program -> Lessons for learning -> Video 5 Description**.

Question 8 – Assembly: Reevaluating Assemblies

This question uses the **Assembly** that the user created in the above question and requires the user to change the value of the angles, then enter the new answer.

Congratulations on fully walking through the tutorials for the CSWA sample exam.

Extra Practice

To further develop your SolidWorks skills and prepare for the CSWA exam further, you may attempt more practice problems that test your proficiency with the program. An excellent resource for this is the CSWA Exam Practice Problems, published on the official SolidWorks website. The link can be accessed below.

https://www.solidworks.com/media/cswa-exam-practice-problems

Click on "download white paper". This resource is a folder that contains PDFs that include practice problems of varying difficulty, like the practice exam we covered above. It also includes a folder which contains Part files for solving assembly questions found in level 9 of the PDFs. The PDFs are divided by levels, and each level is centered around a feature or tool in SolidWorks.

1. Level 1 contains questions that test 2D Sketching and Extrude Boss
2. Level 2 contains questions that test 2D Sketching and Extrude Boss as well
3. Level 3 contains questions that primarily test Sketch Patterns
4. Level 4 contains questions that primarily test both 2D and 3D fillets and chamfers
5. Level 5 contains questions that primarily test proficiency with reference geometry
6. Level 6 contains questions that primarily test Revolved Boss and Cuts

7. Level 7 contains questions that primarily test Mirror and Reference Planes
8. Level 8 contains questions that primarily test Sweep Boss and Cuts
9. Level 9 contains questions that test Assembly Mates
10. Level 10 contains more difficult questions that test a mixture of previously mentioned tools and features.

This playlist offers solutions to the questions spanning the PDFs of Level 1 to Level 3:

https://youtube.com/playlist?list=PLhEi_f3YTnAzVxxGnEXpDyx_e4NFhSC0y&si=566sQH5G6Se0qkAA

Good luck with practicing your SolidWorks skills! We hope this document was able to help you prepare adequately for the CSWA exam. Hopefully you pass!

Sincerely, Mouiz Majid and Mohamed Sidahmed